# 6. CIRCUIT DIAGRAM

## 1-3-1-6_ANT_SVLTE_VZW_NON_GLOBAL

Rev_0.3

### ANT1 (LTE B13, 4 TRX)

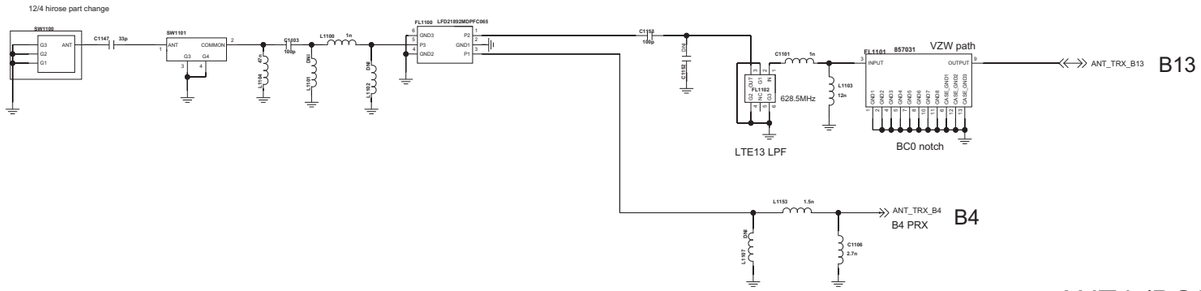


### ANT4 (BC0/BC1_1x/DO_DRX)

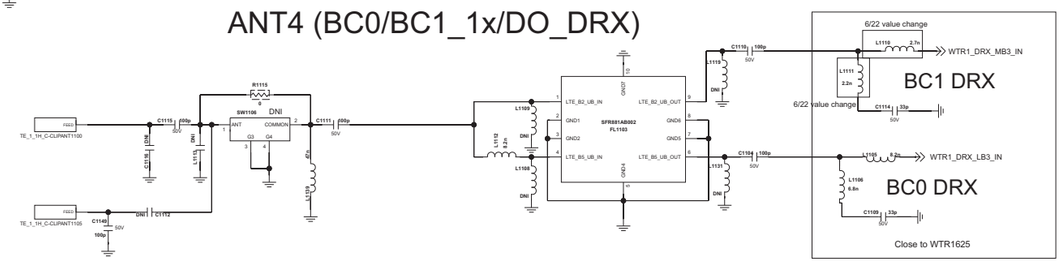


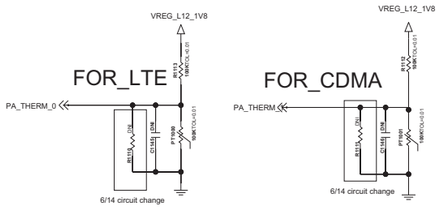


### ANT2 (CDMA 1X/DO TRX)

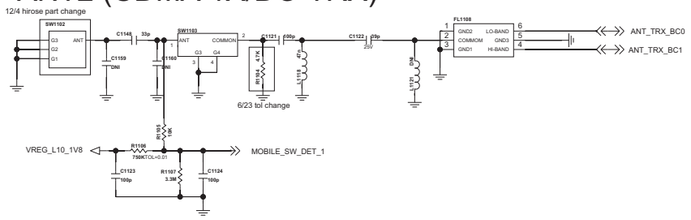


RADIATION_DETECT

### ANT5 (LTE B4,B13_DRX)

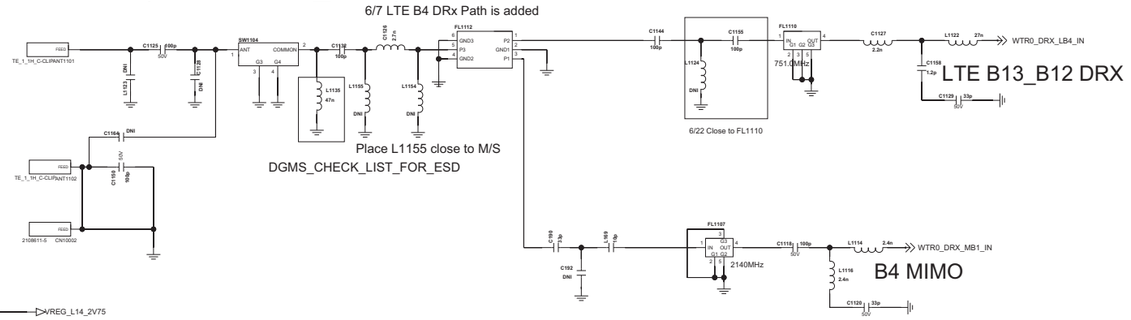


### ANT3 (GNSS)

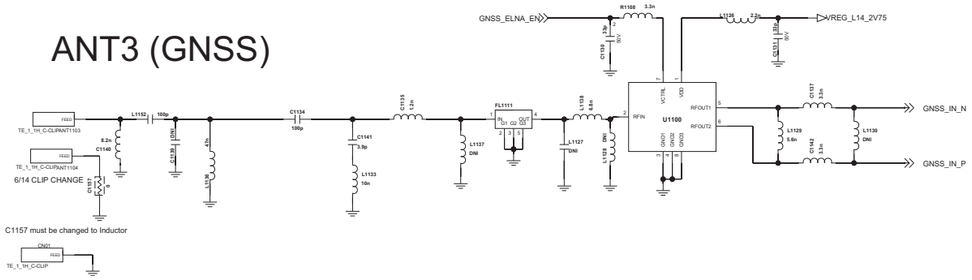




Copyright © 2014 LG Electronics. Inc. All right reserved.
Only for training and service purposes

< 1-3-6-3_TRX_B13_B4 > Rev_0.3

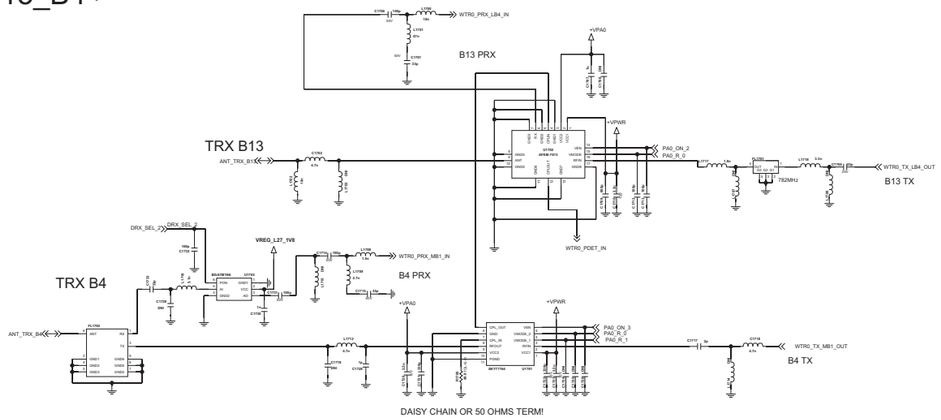


< 1-3-4-2_PT_APT_LM3263 > Rev_0.3 FOR ONLY SVLTE(IF NOT SVLTE, REMOVE THAT)

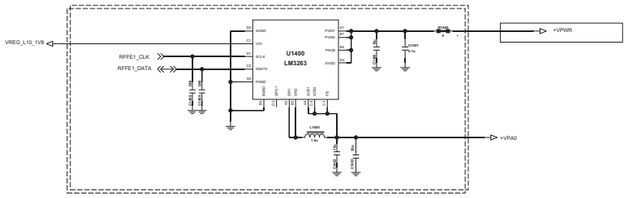




Copyright © 2014 LG Electronics. Inc. All right reserved.
Only for training and service purposes

# < 1-3-5-2_RFIC_SVLTE_WTR1625 >

Rev_0.3

| RF PORT MAP TABLE FOR WTR1625(L)+WFR2600 v01 | | | | | | |
|---|---|---|---|---|---|---|
| WTR1625 RF PORT MAPPING | | | | | | |
| RF PORT | KR | DCM, KDDI | ATT_TMUS_SPC | EU_GLOBAL | VZW_USC | |
| TX_LB1_OUT | GSM_LB | GSM_LB | B5/26, BC0/10 | B5/8, BC0 | B5, B8 | BC0 |
| TX_LB2_OUT | | | GSM_LB | GSM_LB | GSM_LB | |
| TX_LB3_OUT | B17 | | | B20 | | |
| TX_LB4_OUT | B5, B8 | B6/18/19, BC0 | B17 | | B12/13 | |
| TX_MB1_OUT | | B11/21 | | B34/39 | B4 | |
| TX_MB2_OUT | GSM_HB | GSM_HB | GSM_HB | GSM_HB | GSM_HB | |
| TX_MB3_OUT | B1, B2 | B1, BC6 | B1/2/25, BC1 | B1/2 | B1, B2 | BC1 |
| TX_MB4_OUT | B3, B4 | | B3/4 | B3 | | |
| TX_HB1_OUT | B7 | B41 | B7 | B7 | | |
| TX_HB2_OUT | | | B41 | B38/40 | | |
| PRX_LB1_IN | 850, B5 | B6/18/19, BC0 | B29 | B20 | | |
| PRX_LB2_IN | 900, B8 | 900 | 900 | 900, B8 | B8, G900 | |
| PRX_LB3_IN | | 850, B5/26, BC0/10 | | 850, B5, BC0 | B5, G850 | BC0 |
| PRX_LB4_IN | B17 | | B17 | | B12/13 | |
| PRX_MB1_IN | B2 | B11/21 | B2/25, BC1 | B2 | B4 | |
| PRX_MB2_IN | GSM_HB | GSM_HB | GSM_HB | GSM_HB | G1800 | |
| PRX_MB3_IN | | | B3 | B3 | B2, G1900 | BC1 |
| PRX_HB1_IN | | B41 | B41 | B38/40 | | |
| PRX_HB2_IN | | | | B34/39 | | |
| PRX_HB3_IN | B7 | | B7 | B7 | | |
| PRX_HMB4_IN | | B1, BC6 | B1/4 | B1 | B1 | |
| DRX_LB1_IN | B8 | | B29 | B20 | | |
| DRX_LB2_IN | B5 | B18/19, BC0 | | B8 | | |
| DRX_LB3_IN | | | B5/26 | | B5 | BC0 |
| DRX_LB4_IN | B17 | | B17 | | B12/13 | |
| DRX_MB1_IN | | B11/21 | B2/25, BC1 | | B4 | |
| DRX_MB2_IN | | | | B39 | | |
| DRX_MB3_IN | | | B3 | B3 | B2 | BC1 |
| DRX_HB1_IN | | | B41 | B38 | | |
| DRX_HB2_IN | | | | B40 | | |
| DRX_HB3_IN | B7 | | B7 | B7 | | |
| DRX_HMB4_IN | | B1, BC6 | B1/4 | B1 | | |
| WFR1620 RF PORT MAPPING | | | | | | |
| RF PORT | KR | DCM, KDDI | ATT_TMUS_SPC | EU_GLOBAL | | |
| PRX_MB1_IN | | | B2/25, BC1 | | | |
| PRX_MB2_IN | B3 | | B3 | | | |
| PRX_MB3_IN | B1/4 | | B1/4 | | | |
| DRX_MB1_IN | | | B2/25, BC1 | | | |
| DRX_MB2_IN | B3 | | B3 | | | |
| DRX_MB3_IN | B1/4 | | B1/4 | | | |

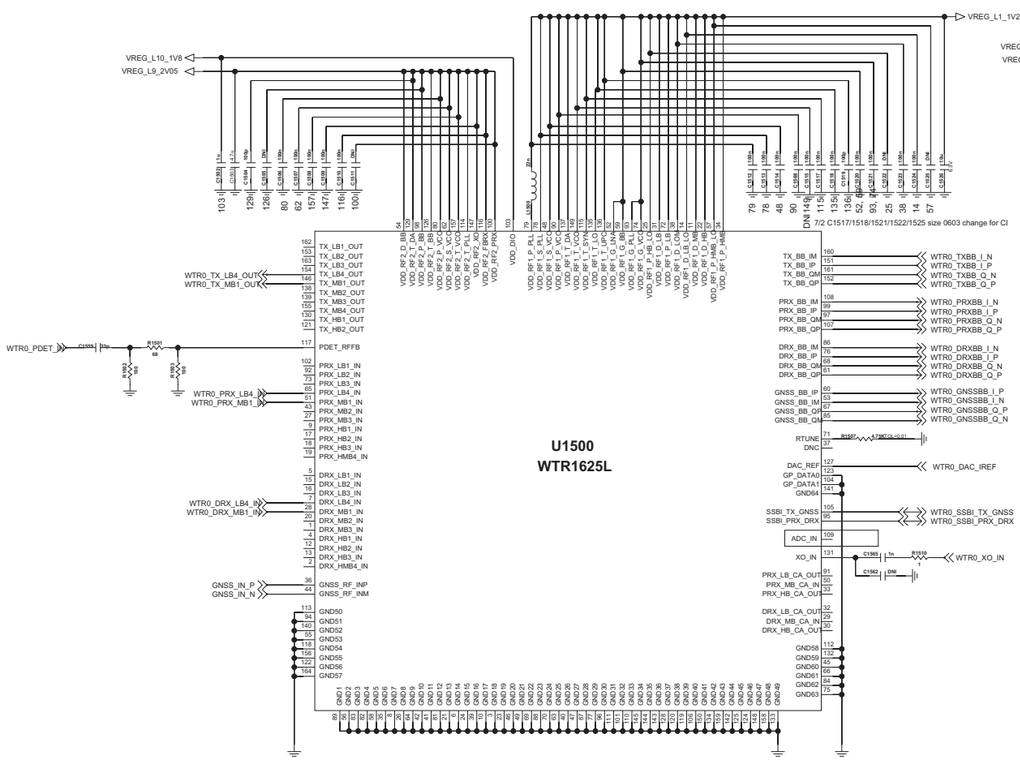


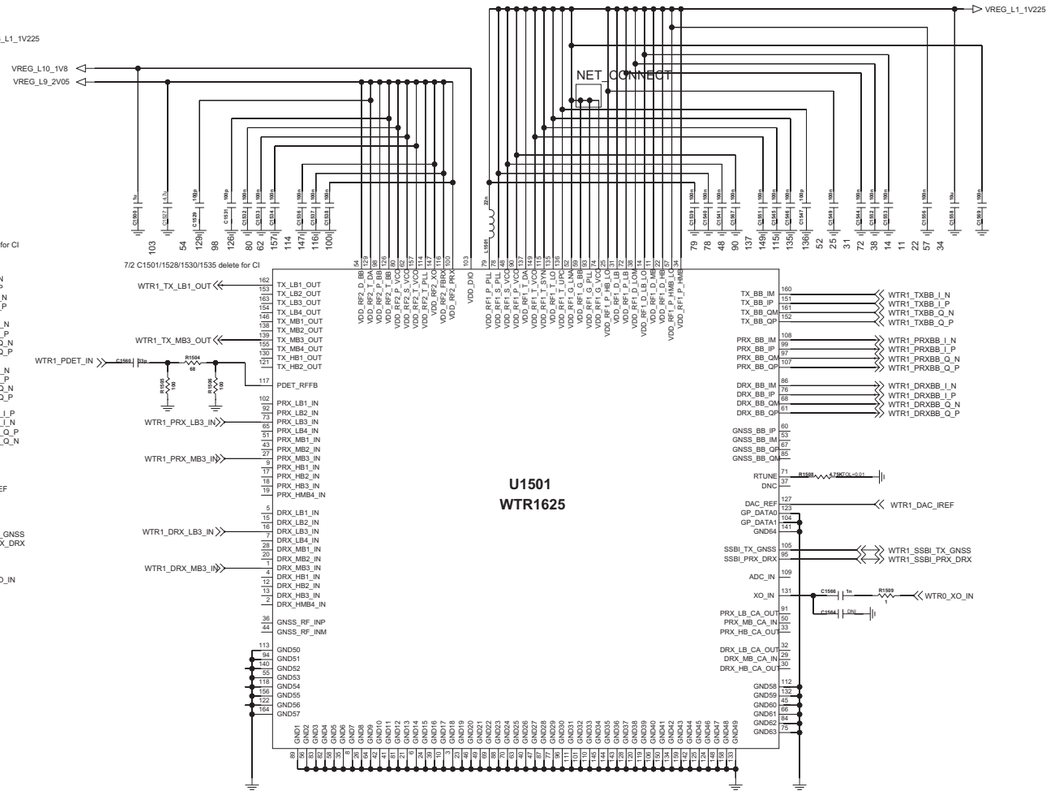




Copyright © 2014 LG Electronics. Inc. All right reserved.
Only for training and service purposes

< 1-3-6-1_TRX_VZW_BC0_BC1>

Rev_0.3

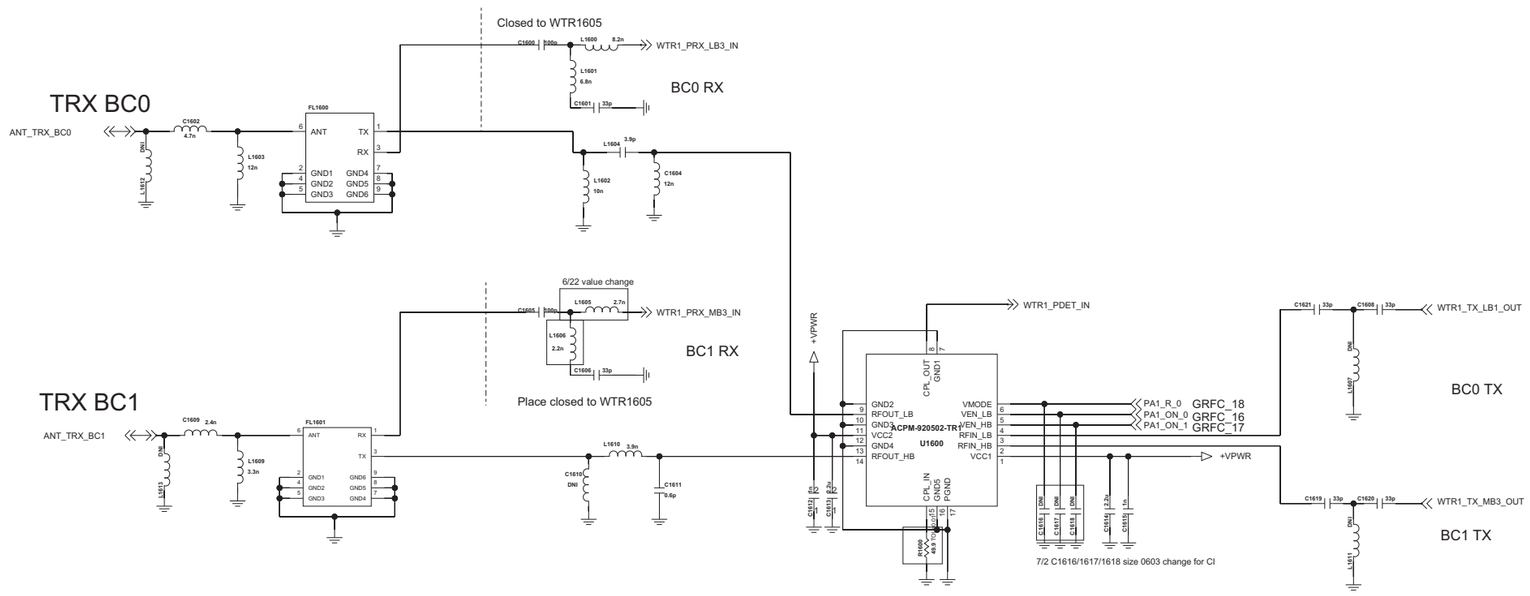


| MODE | VEN_CELL | VEN_PCS | VMODE |
|---|---|---|---|
| Cell_HPM | H | L | L |
| Cell_LPM | H | L | H |
| PCS_HPM | L | H | L |
| PCS_LPM | L | H | H |



Copyright © 2014 LG Electronics. Inc. All right reserved.
Only for training and service purposes

# <2-1-3-3-1_MSM8926_DATA>

Rev_1.0

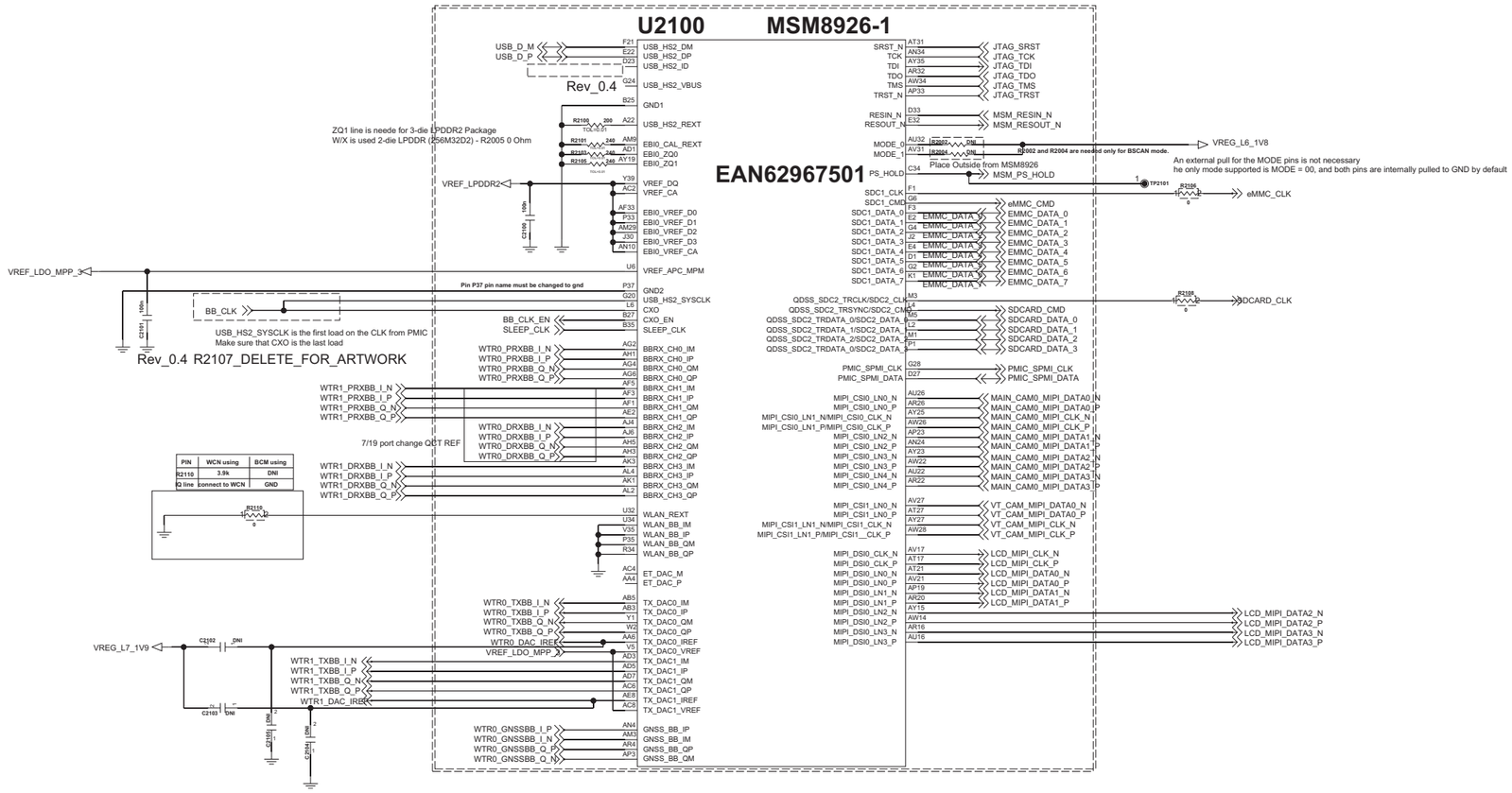




Copyright © 2014 LG Electronics. Inc. All right reserved.
Only for training and service purposes

<2-1-3-3-2_MSM8926_GPIO>

Rev_1.0

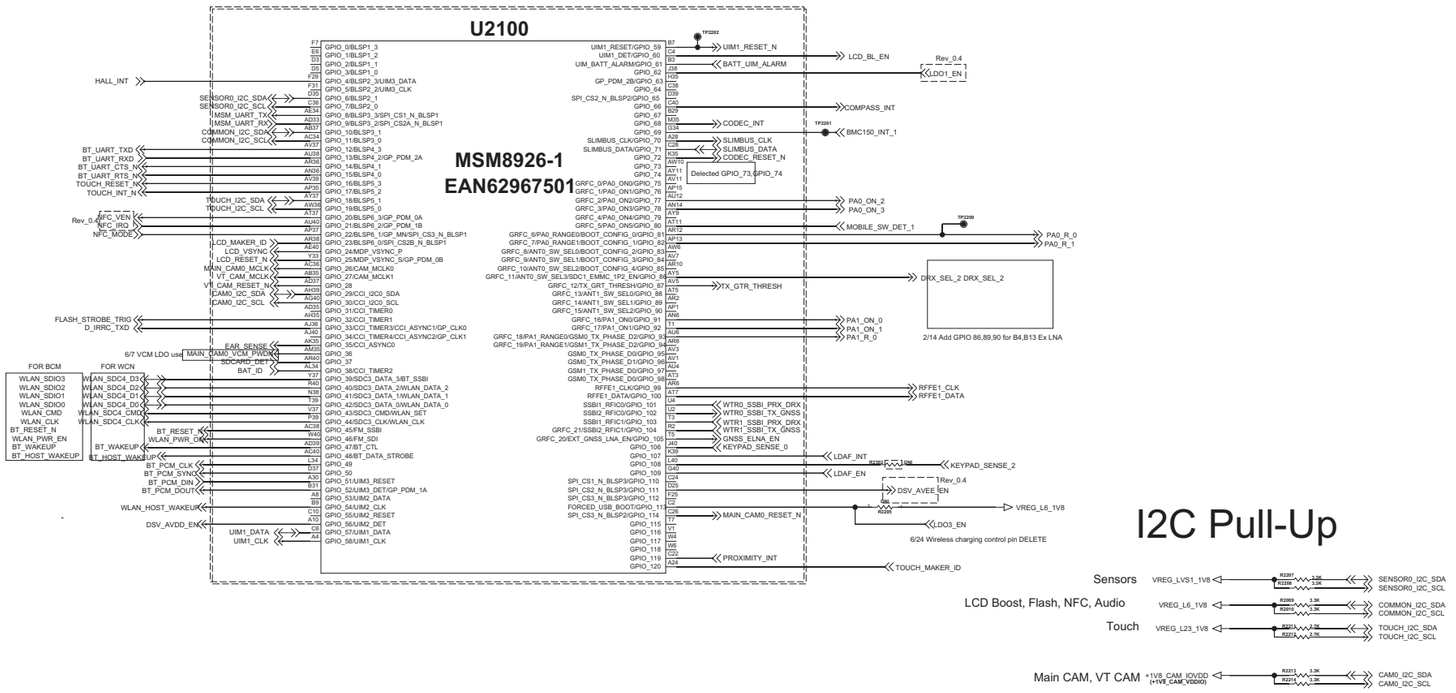




Copyright © 2014 LG Electronics. Inc. All right reserved.
Only for training and service purposes

# <2-1-3-3-3_MSM8926_POWER>

Rev_1.0

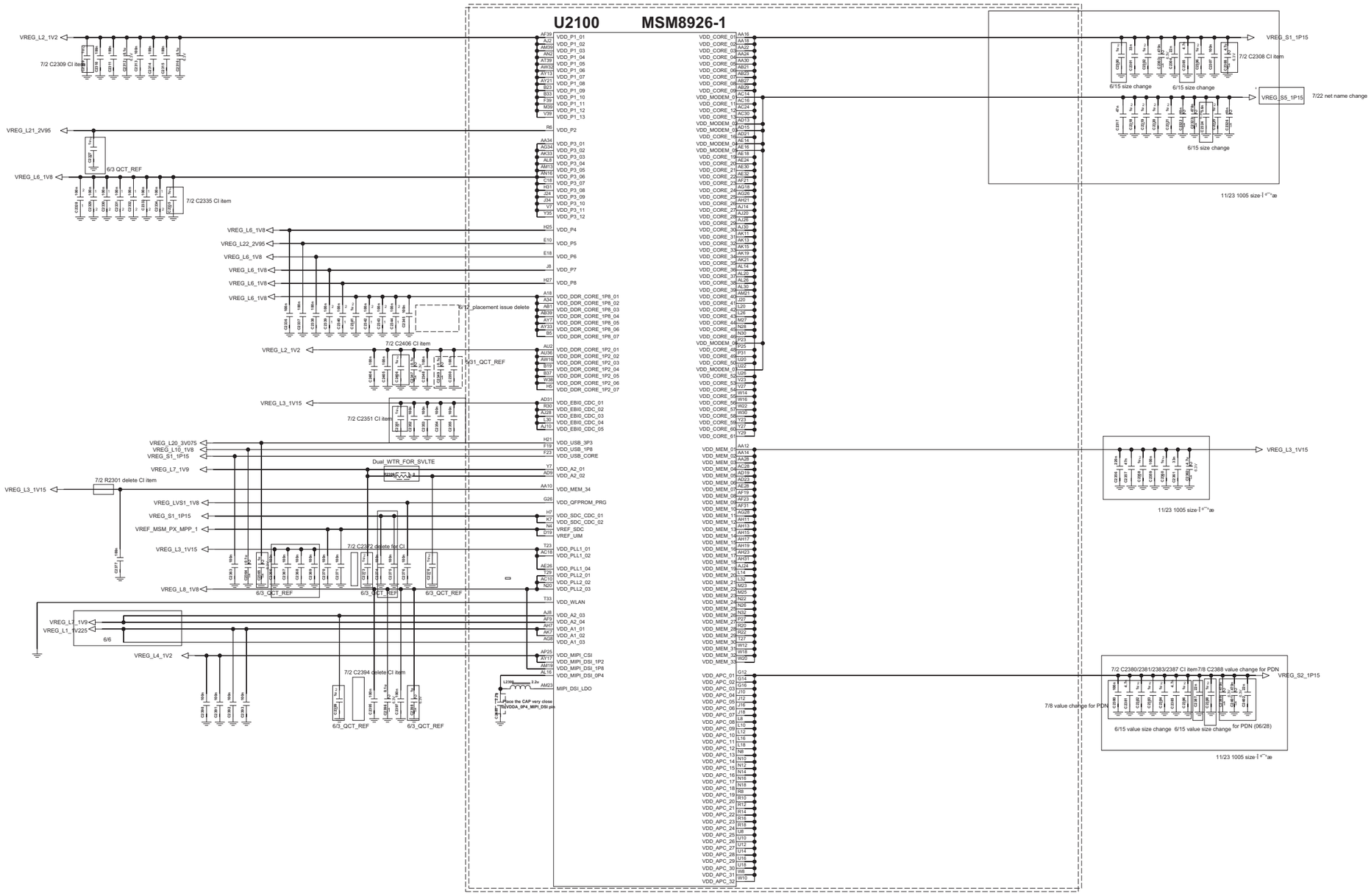




Copyright © 2014 LG Electronics. Inc. All right reserved.
Only for training and service purposes

Added for Current spike on Vdd_P3 after freeasID assertion

<2-1-3-3-4_MSM8926_GND_NC>

Rev_1.0

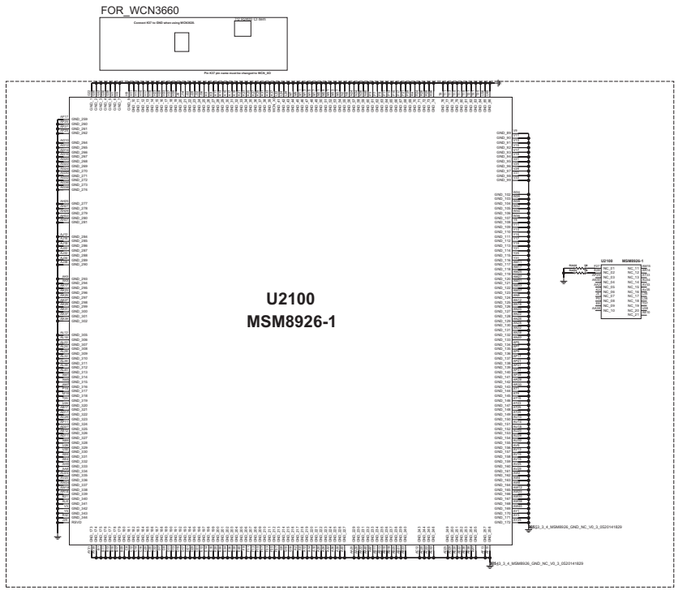




Copyright © 2014 LG Electronics. Inc. All right reserved.
Only for training and service purposes

## < 3-2-3-1-1_eMMC_5_0_8Gbyte_Toshiba >Rev_0.3

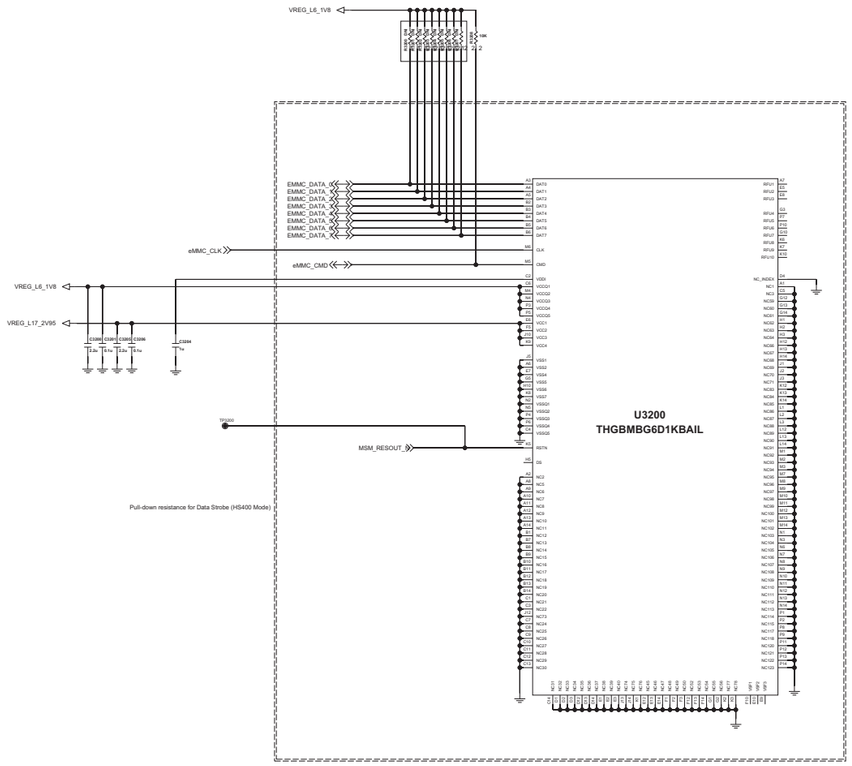


< 3-1-2-4-1_LPDDR2_PoP_12Gbit_SK_Hynix >
POP_12Gb LPDDR2 PoP 168ball 1-Channel (29nm 4Gb x 3)
Rev_0.3

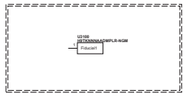



Copyright © 2014 LG Electronics. Inc. All right reserved.
Only for training and service purposes

# < 4-1-3-1_PMIC_PM8926_DATA >

Rev_0.6

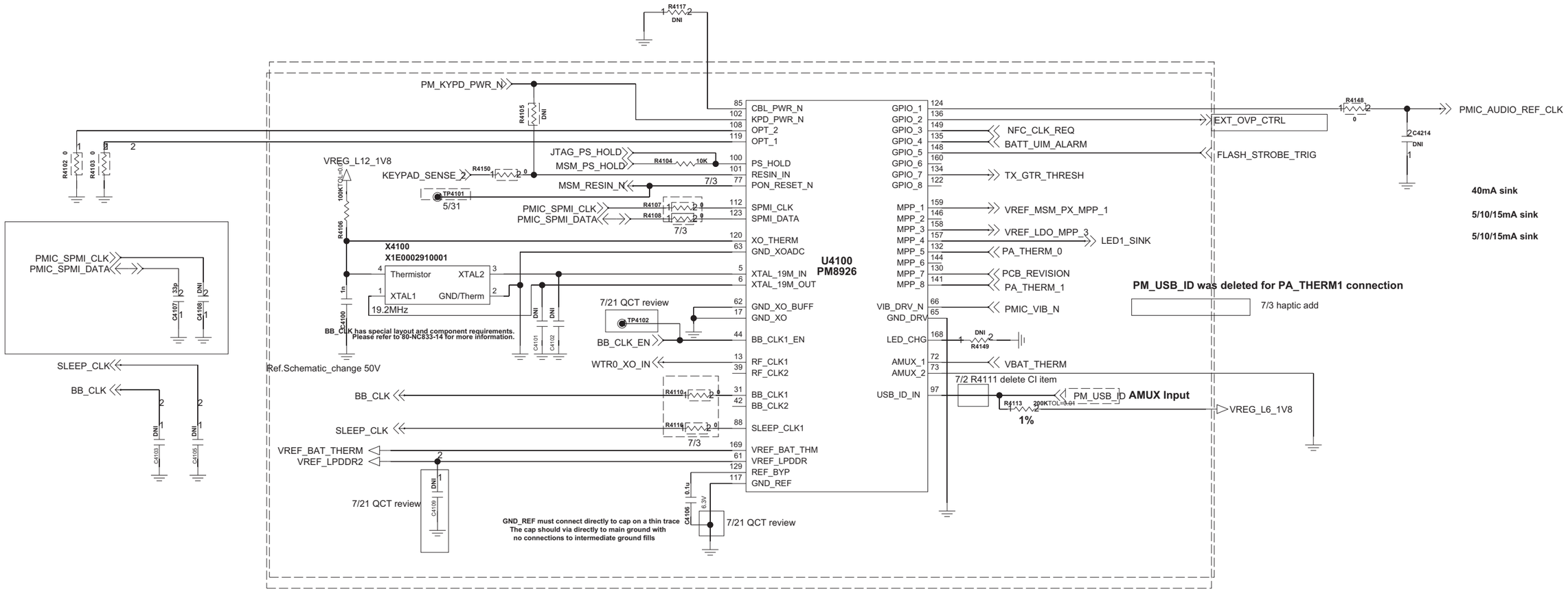




Copyright © 2014 LG Electronics. Inc. All right reserved.
Only for training and service purposes

# < 4-1-3-2_PMIC_PM8926_POWER >

Rev_1.0

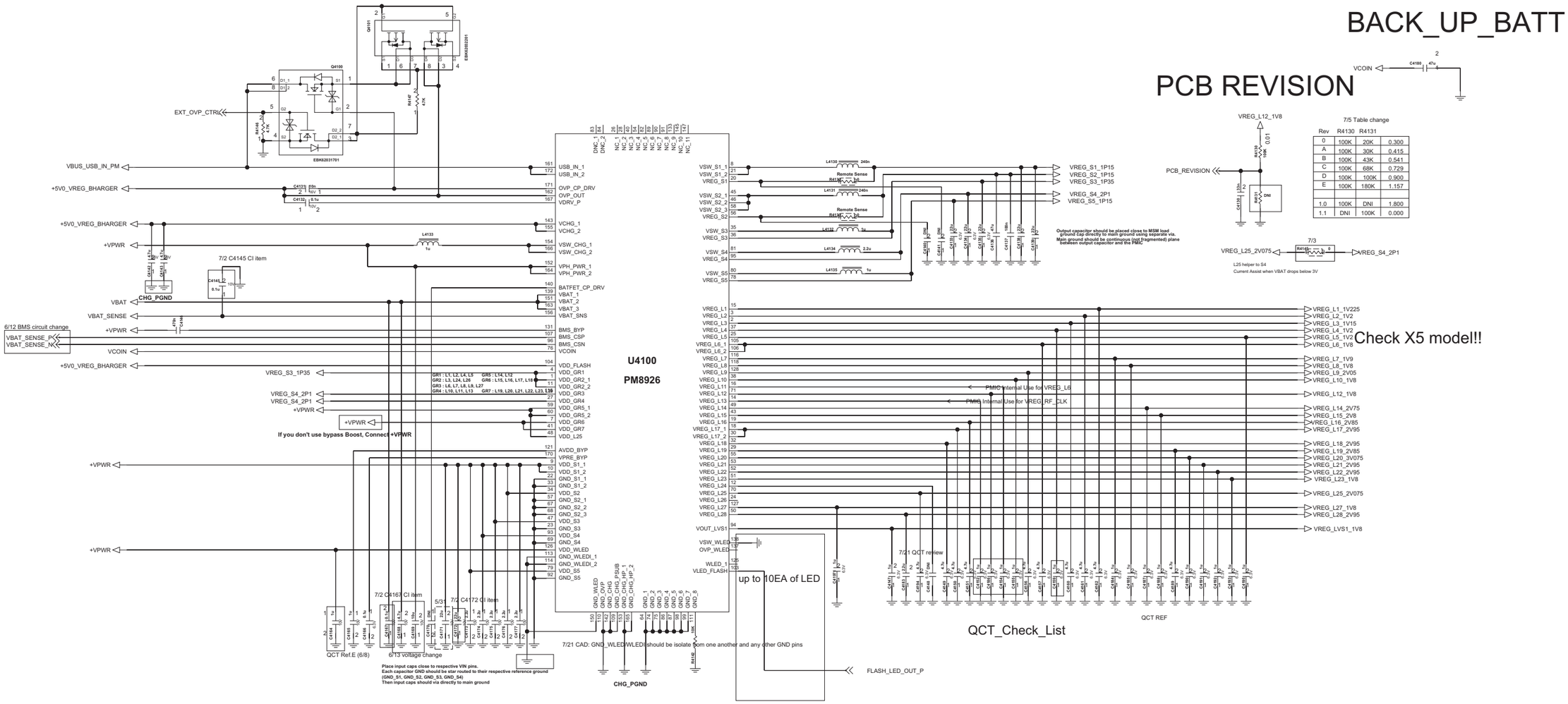




Copyright © 2014 LG Electronics. Inc. All right reserved.
Only for training and service purposes

# <4-4-2_LCD_Backlight_Booster_LM3630>Rev_1.0

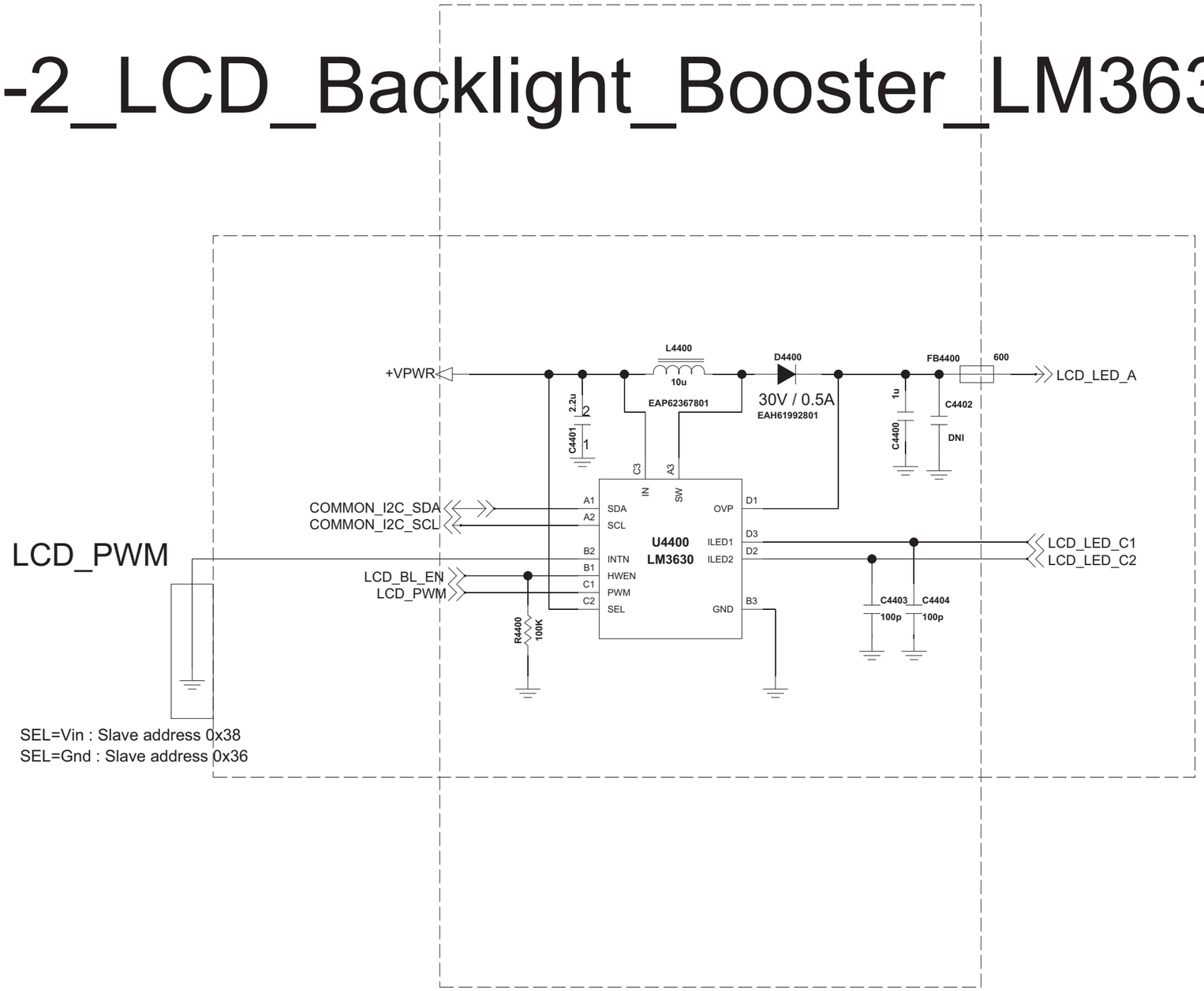




Copyright © 2014 LG Electronics. Inc. All right reserved.
Only for training and service purposes

< 5-1-1-2_BT_Wi-Fi_BCM4334L >

Rev_0.6

BT/WiFi RF Filter

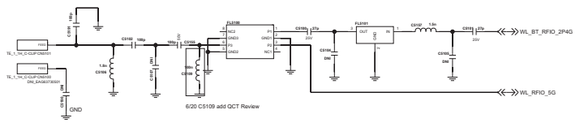

2.4G FEM(SPDT +5G PA + LNA)

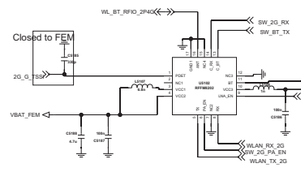

5G FEM(SPDT +5G PA + LNA)

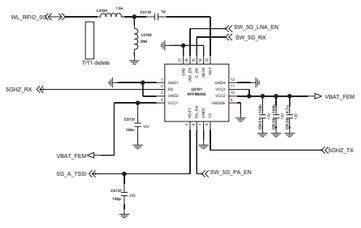



BCM4334L

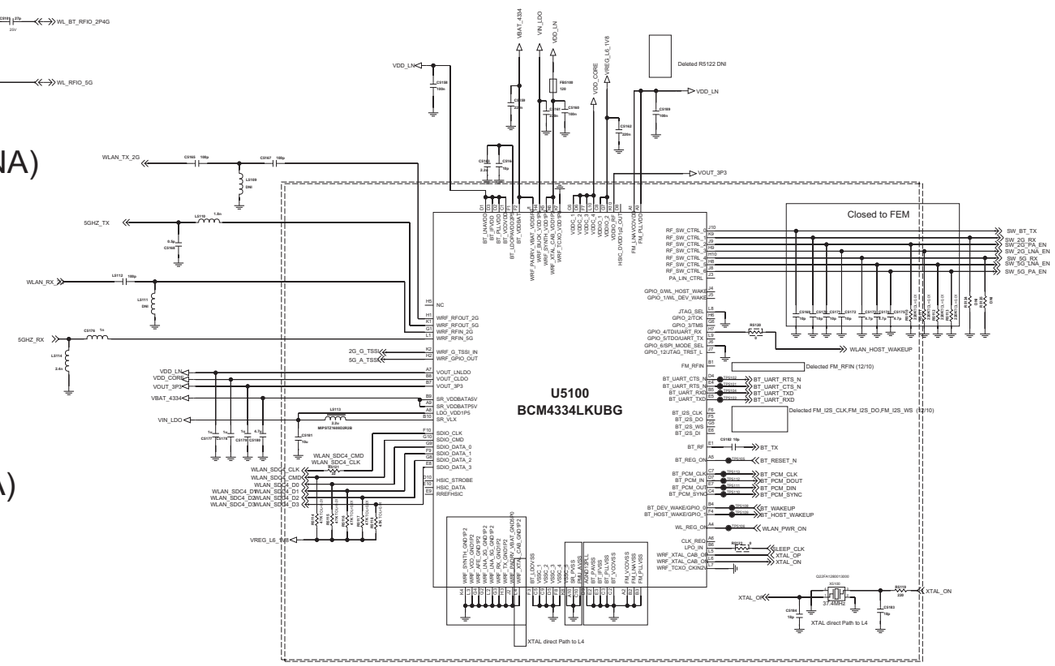




Copyright © 2014 LG Electronics. Inc. All right reserved.
Only for training and service purposes

# <5-2-1-4_NFC_PN547>

Rev_1.0

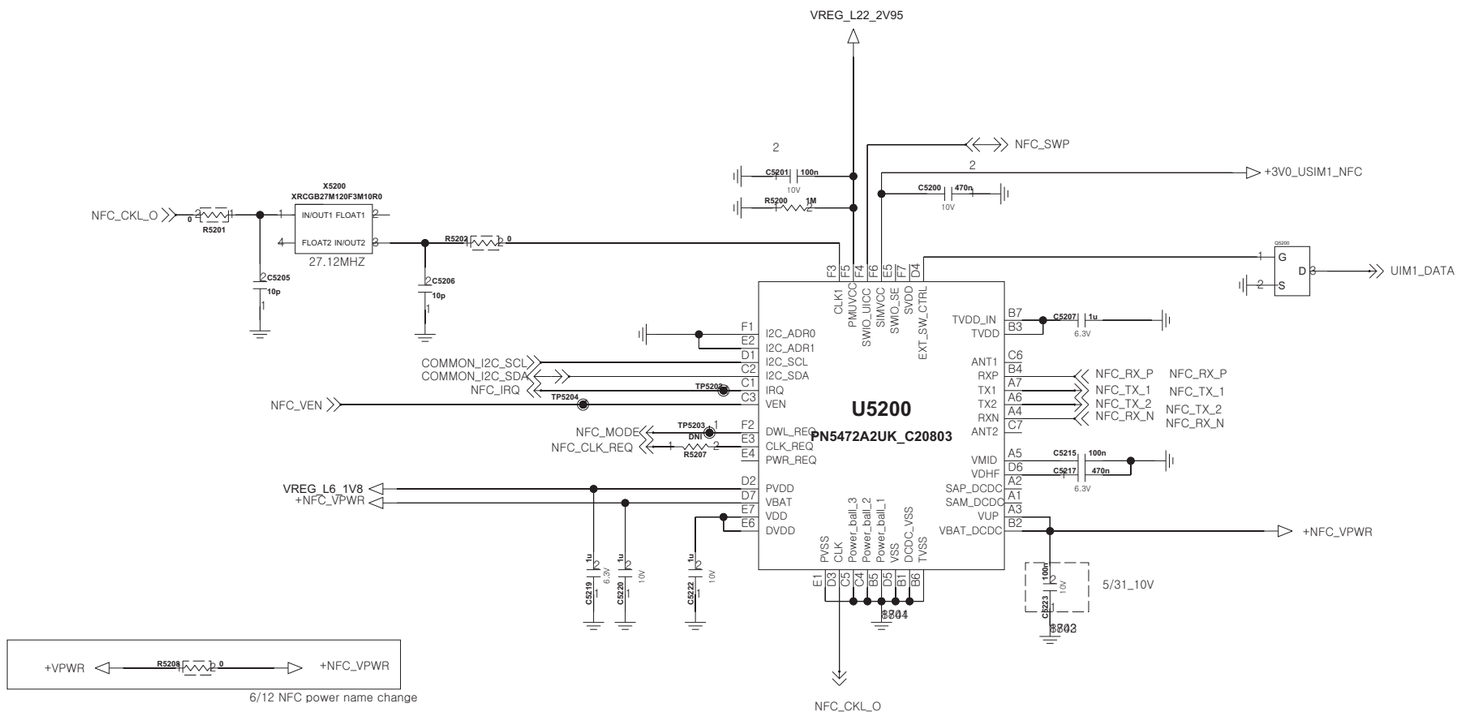


# NFC Antenna

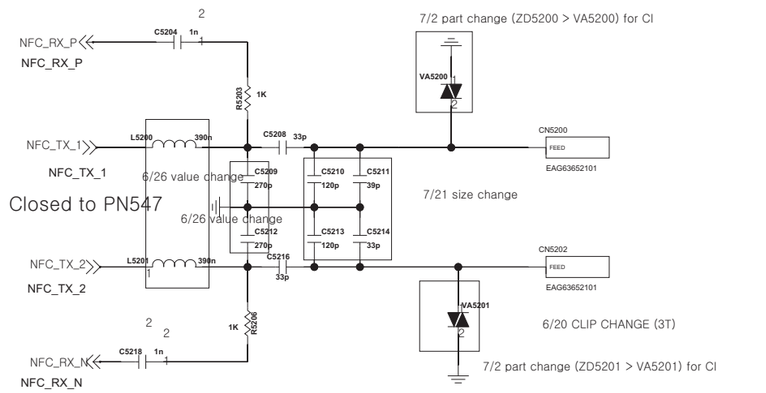


ZD5200-5201 : Clamping 15V / 0.3pF



Copyright © 2014 LG Electronics. Inc. All right reserved.
Only for training and service purposes

< 6-1-1-1_Codec_WCD9302 >

Rev_1.0

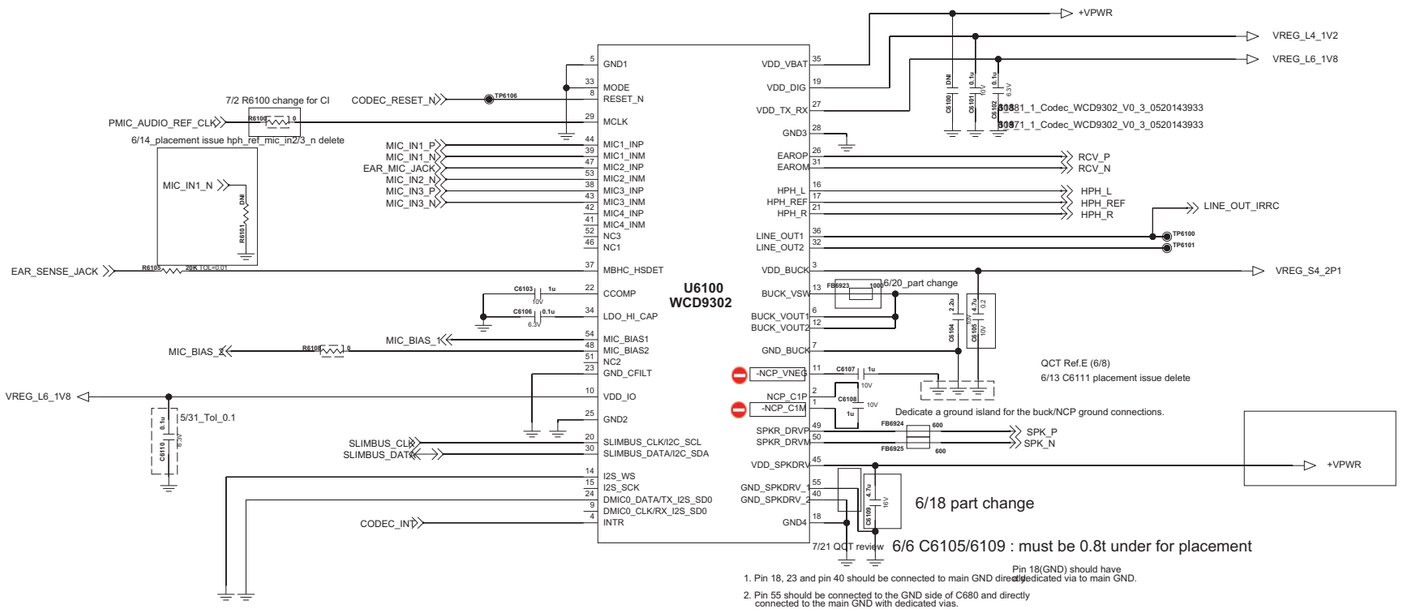




Copyright © 2014 LG Electronics. Inc. All right reserved.
Only for training and service purposes

# < 6-6-1_Earjack > Rev_0.3

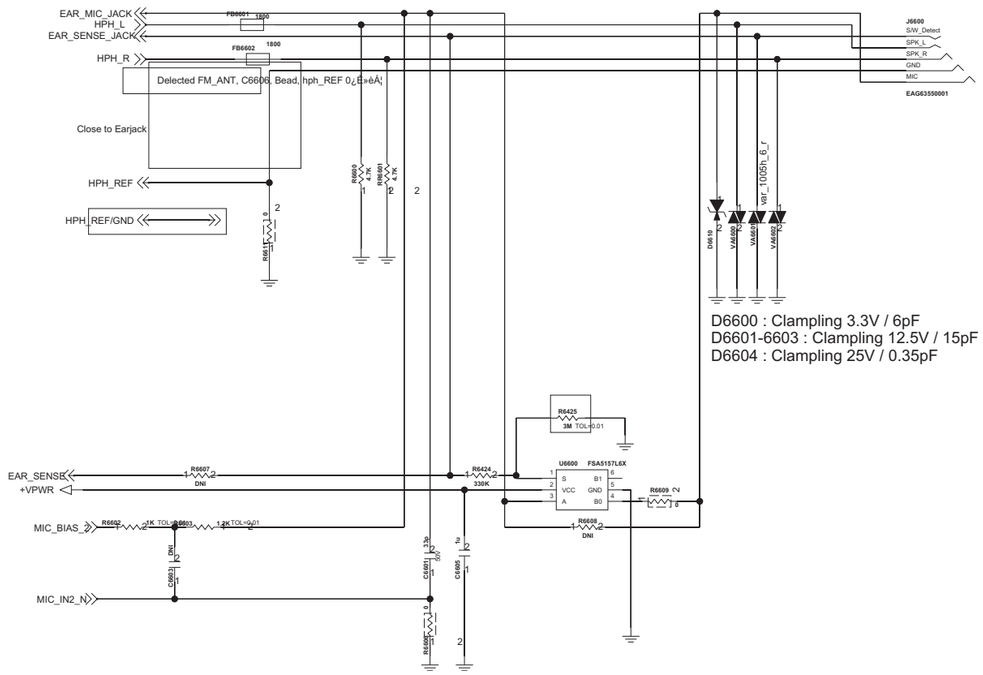


# < 6-8-1_Receiver_Only > Rev_0.3

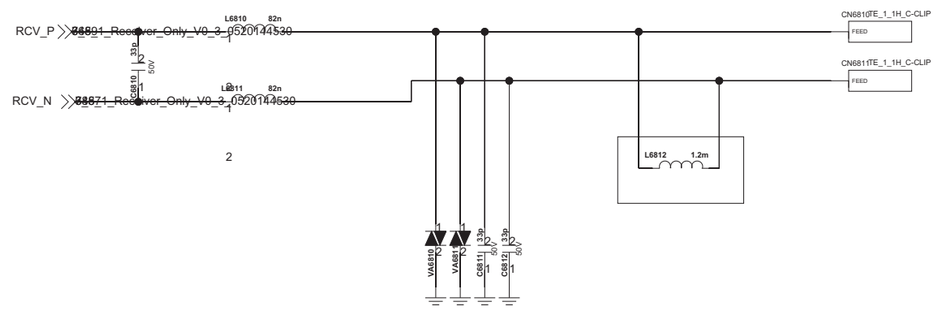


D6810-6811 : Clampling 12V / 6.5pF


Copyright © 2014 LG Electronics. Inc. All right reserved.
Only for training and service purposes

# < 6-9-2_2MIC > Rev_0.3

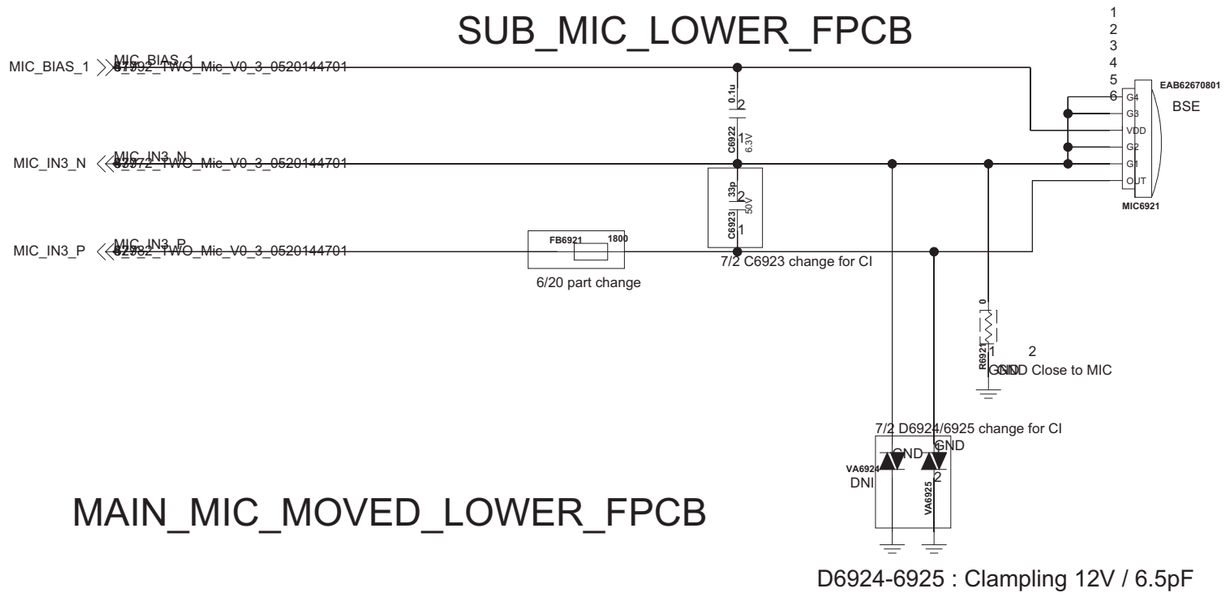


# <7-5-1_DSV_TPS65132> Rev_1.0

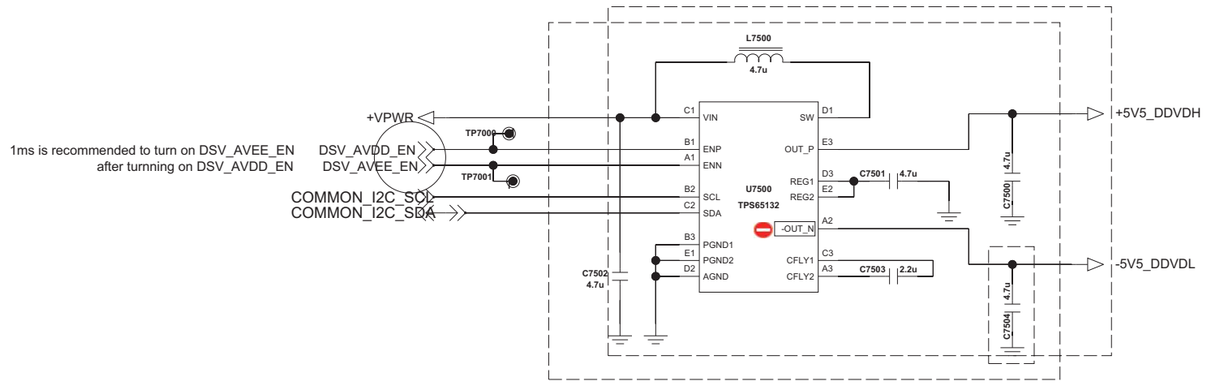


DGMS Guide
MC-C06162-1 : 1. Don't connect Positive of Tantal, TVS diode to Negative voltage if use
2. We recommend MLCC capacitor in this case


Copyright © 2014 LG Electronics. Inc. All right reserved.
Only for training and service purposes

# B2 Lite Touch pin map

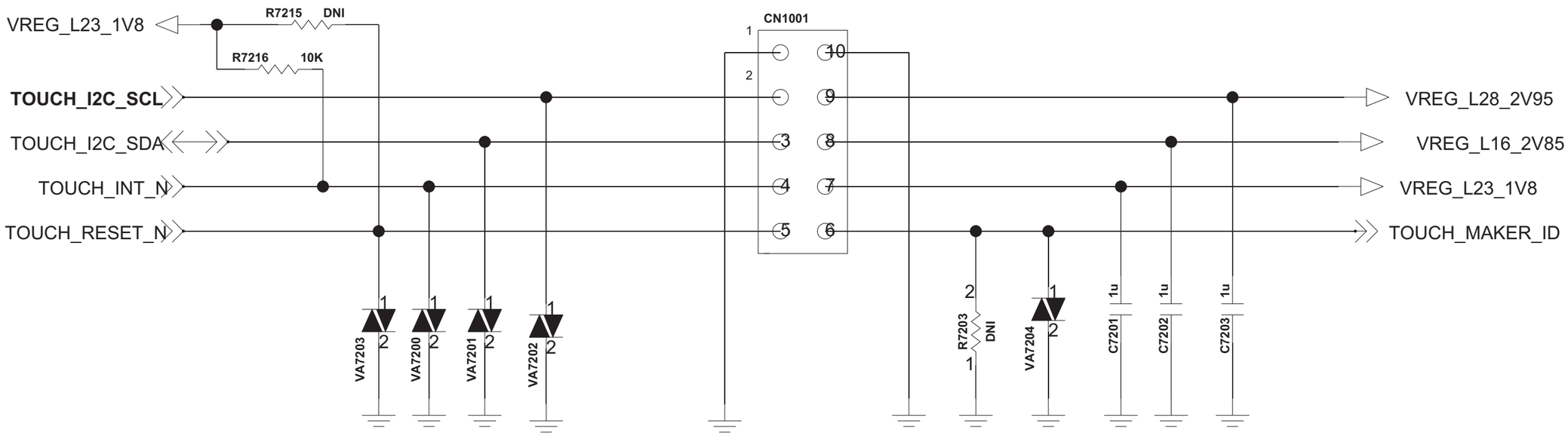




Copyright © 2014 LG Electronics. Inc. All right reserved.
Only for training and service purposes

# < 7-3-_Main_Camera_30pin_5M_8M >

## Check G2 Mini Model!!

1.MAIN_CMA0_WP_N_GPIO_DELETE
2.ADD_SYMBOL_NAME

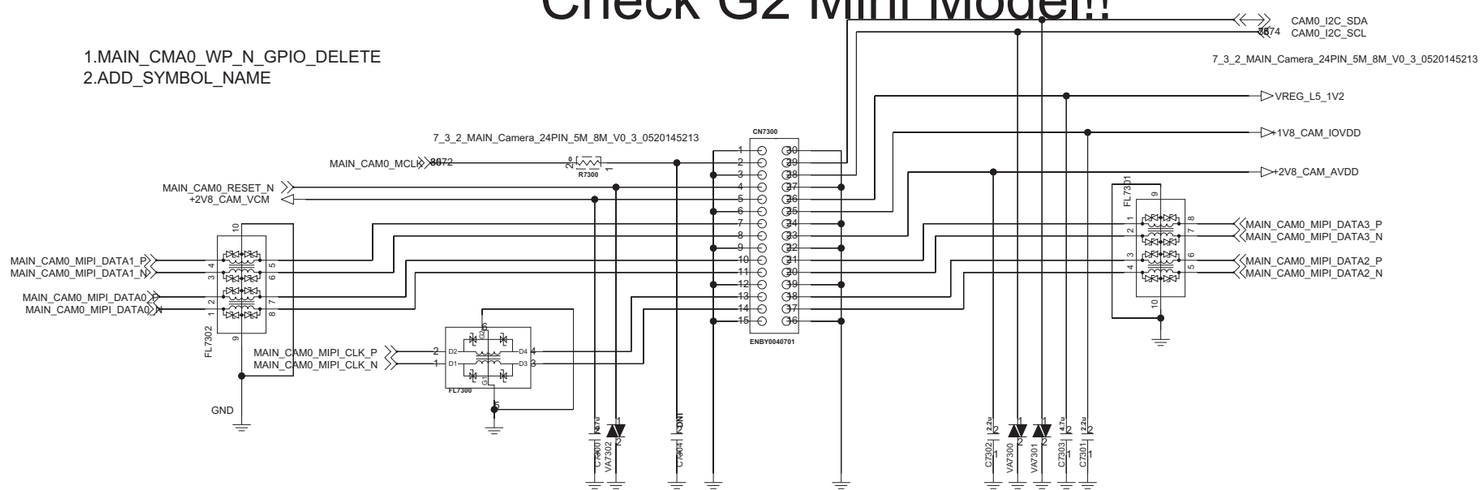


## VT_MAIN_CAM_LDO1

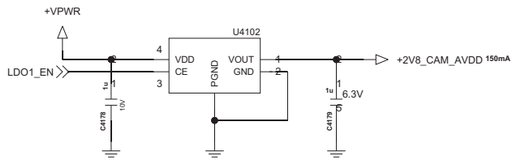


## VT_MAIN_CAM_LDO3

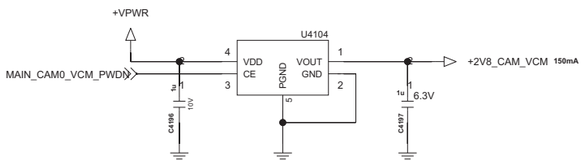


## VT_MAIN_CAM_LDO4

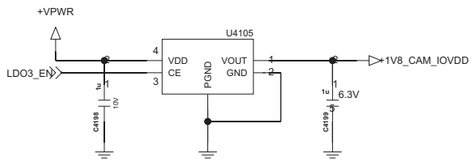


## LDAF 6PIN Contact type

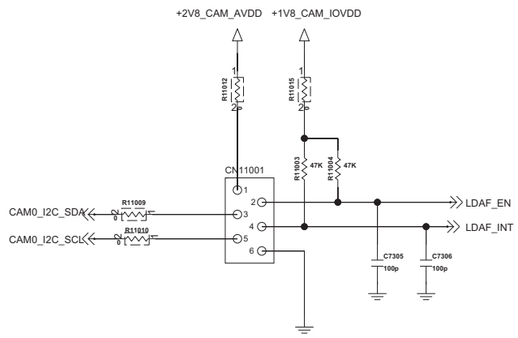



Copyright © 2014 LG Electronics. Inc. All right reserved.
Only for training and service purposes

# < 7-4-1_VT_Camera_20pin_VGA_1.26M_1.3M_2.4M> Rev_0.3

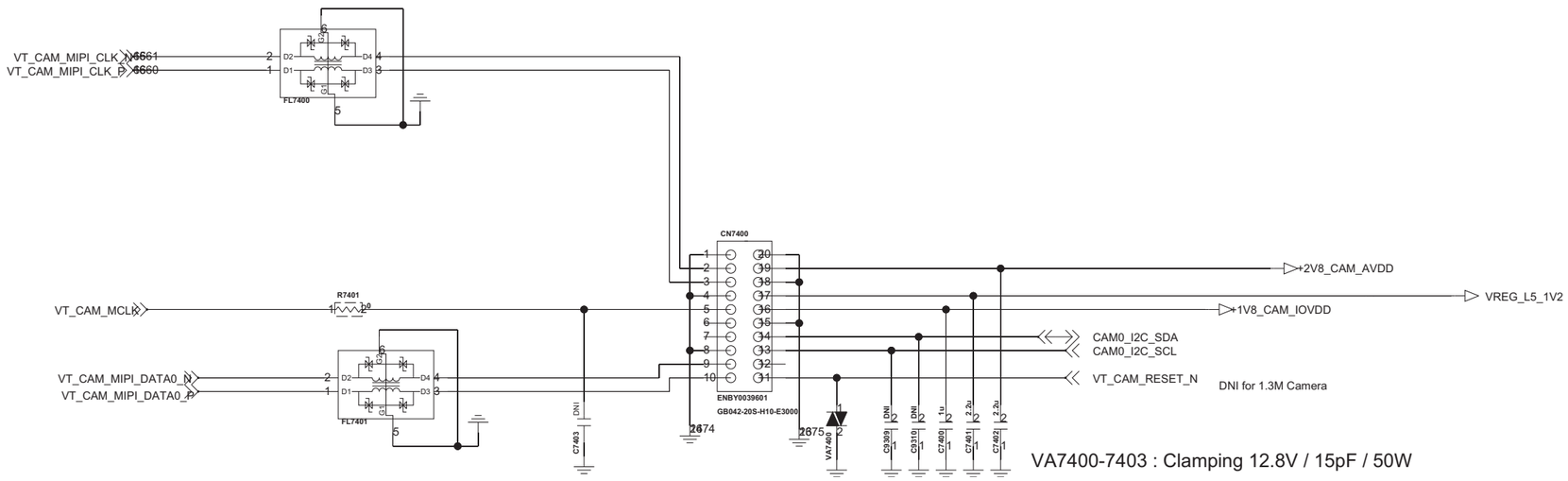


Rev_0.3

# <8-1-2-1_Accel_Compass_BMC150>

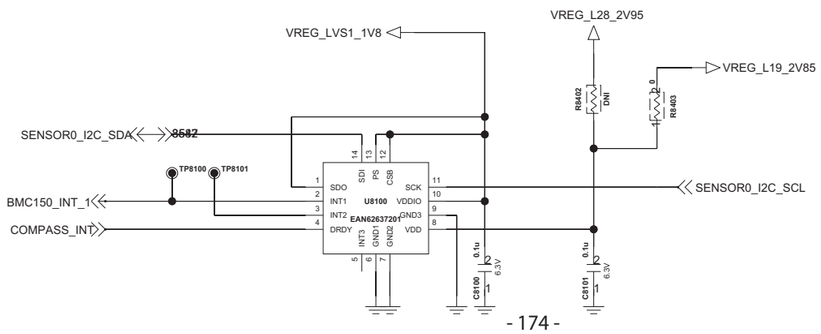



Copyright © 2014 LG Electronics. Inc. All right reserved.
Only for training and service purposes

## <8-4-1-1_Proximity_APDS-9930-200> REV.0.3

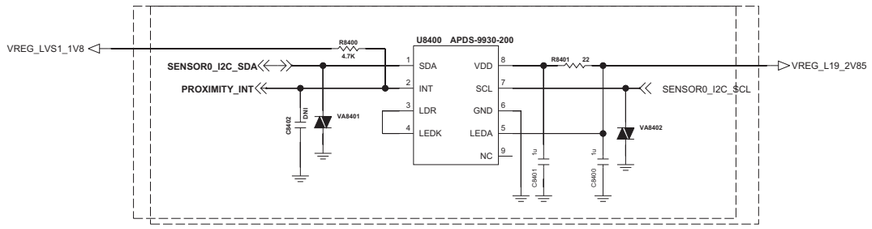


## <8-7-1_Hall IC_BU520XX>

Rev_0.3

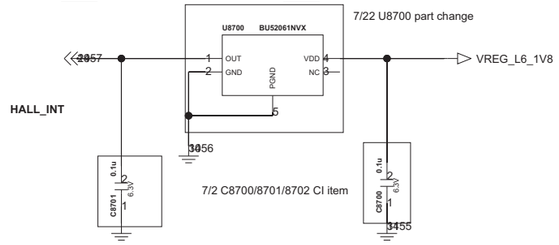


DGMS_CHECK_LIST U8700 : QUICK COVER

## < 8-9-1-2_IRRC_w/o_driver_IC >

Rev_0.3

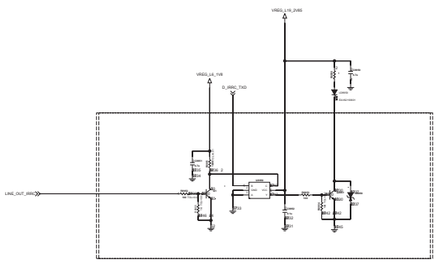

## <9-1-2_Battery_CNT_4P>

Rev_0.3

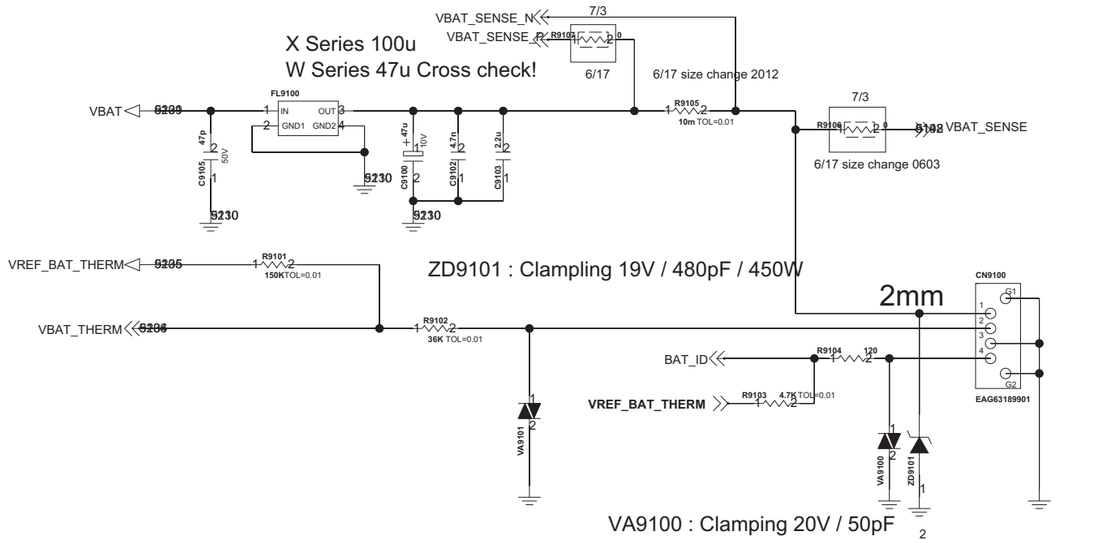




Copyright © 2014 LG Electronics. Inc. All right reserved.
Only for training and service purposes

# < 9-3-1_JTAG > Rev_0.3

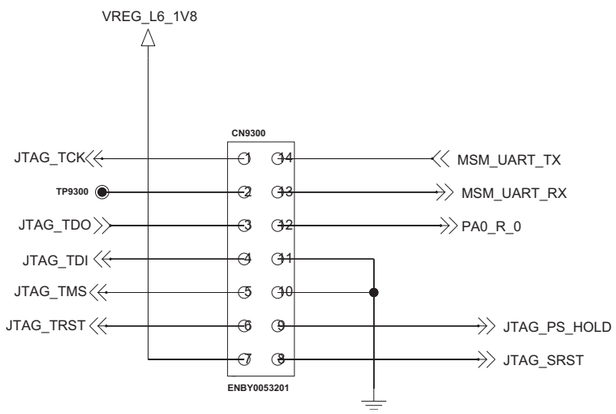


# < 9-5-3_Micro_SD_Combo > Rev_0.3

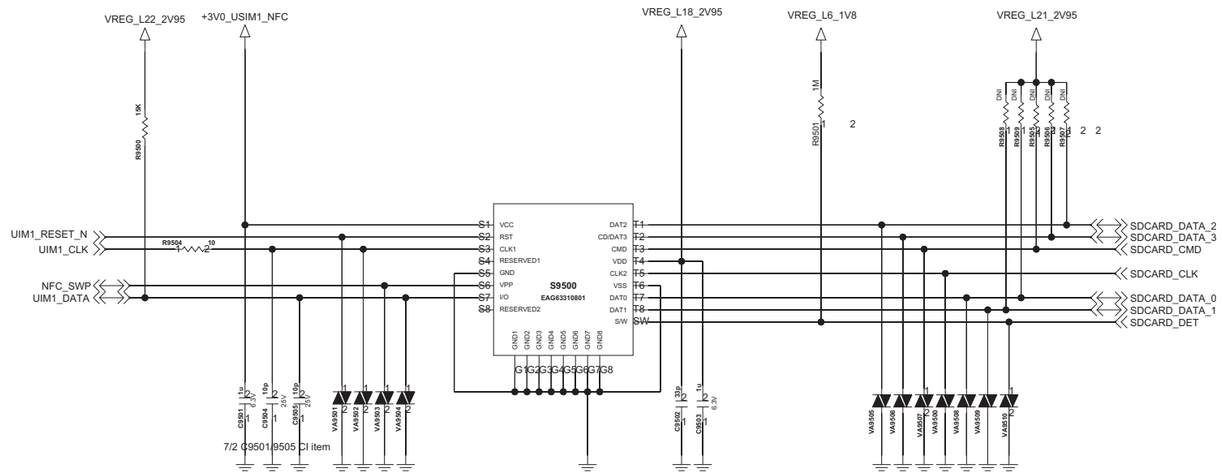


ZD9501,9510 : Clamping 15.5V / 100pF
ZD9500,9502-9509 : Clamping 12.8V / 15pF / 50W

| Card Detect | SW1 SW2 | SD_CARD_DET |
|---|---|---|
| Card Installed | | 1.8V |
| Card Not Installed | | GND |

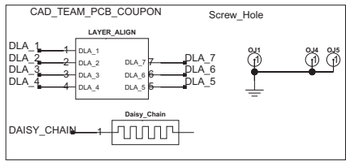



Copyright © 2014 LG Electronics. Inc. All right reserved.
Only for training and service purposes

# <9-8-3_Flash_LED> Rev_0.3

## LED MODULE (LOW COST)

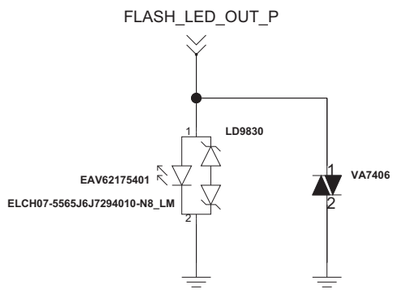


ZD9830 : Clamping 12.3V / 65pF / 150mW

# < 9-9-1-1_Motor > Rev_0.3

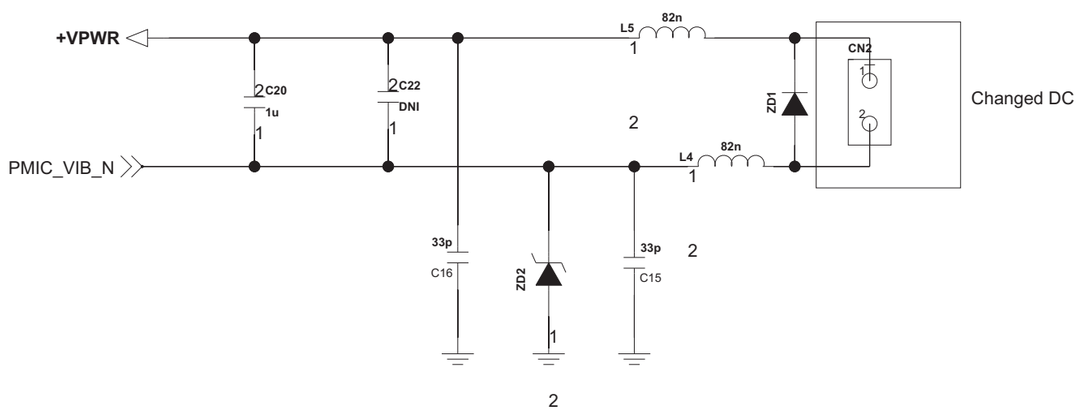



Copyright © 2014 LG Electronics. Inc. All right reserved.
Only for training and service purposes

# CI

## LOWER_FPCB_CON._MAIN

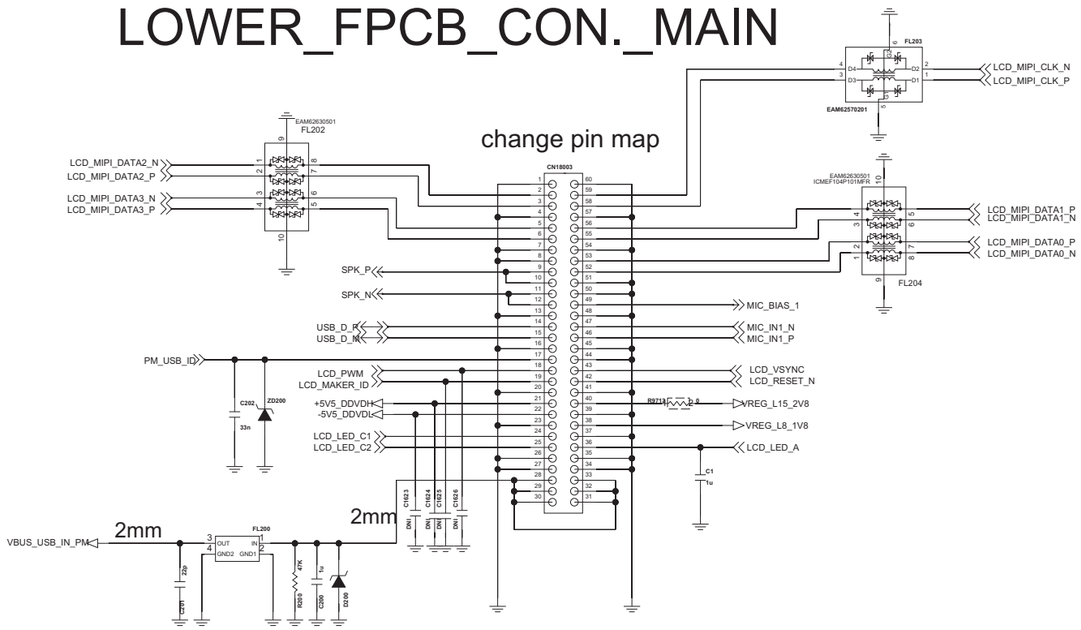


## TOP_SHIELD_CAN_CLIP

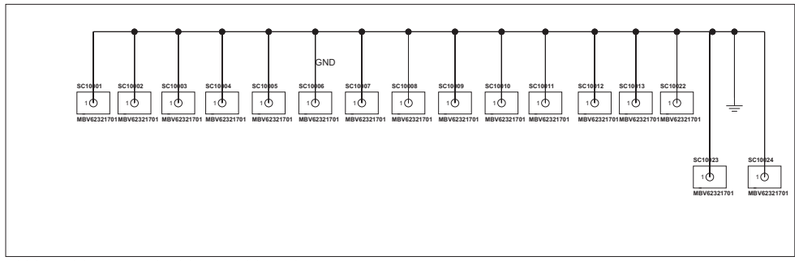


## BOT_SHIELD_CAN_CLIP

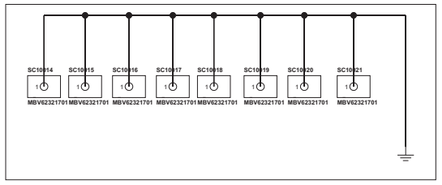

## TOP_GND_CONTACT_CLIP

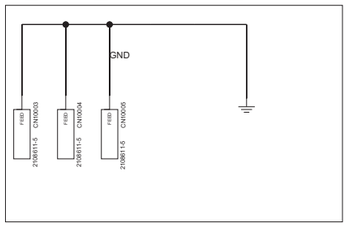


## LED Indicator

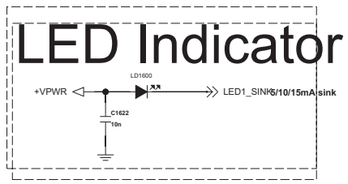


RED

## Rev_0.5

## Back Volume Key

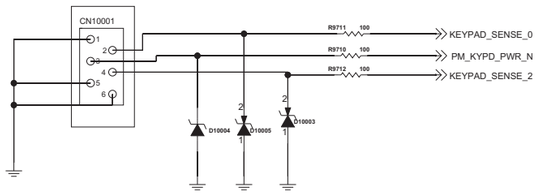




Copyright © 2014 LG Electronics. Inc. All right reserved.
Only for training and service purposes

# B1_lite Back Key

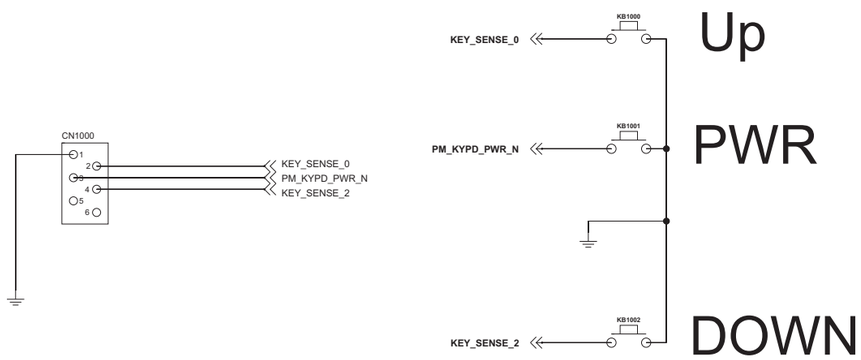


# B2_lite LDAF

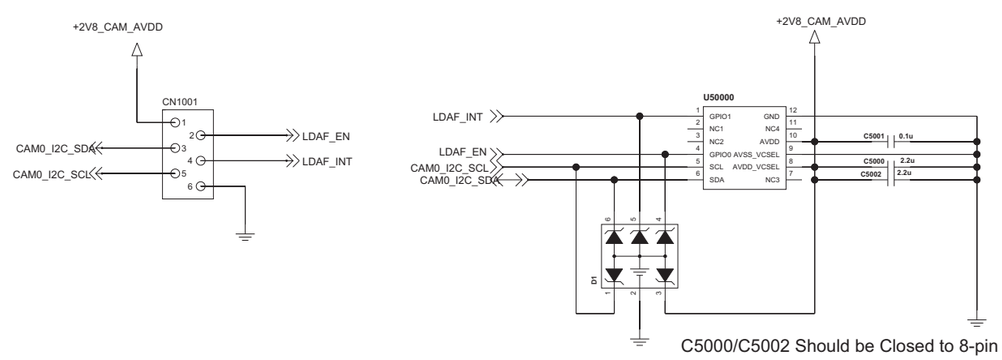


C5000/C5002 Should be Closed to 8-pin of U5000(VL6180) Within 5/.0mm



Copyright © 2014 LG Electronics. Inc. All right reserved.
Only for training and service purposes

## < 6-9-2_2MIC >Rev_0.3

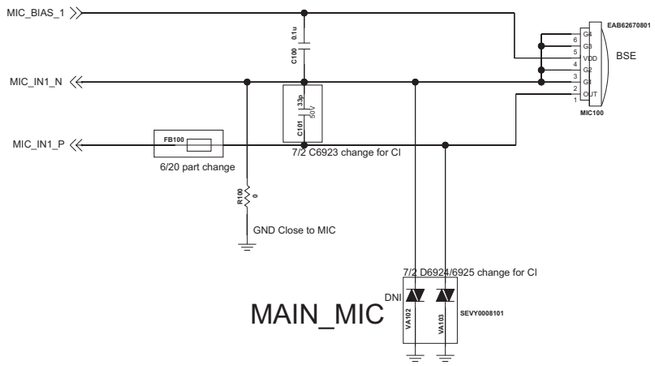


D6924-6925 : Clampling 12V / 6.5pF

## < 6-7-1_Speaker >Rev_0.4

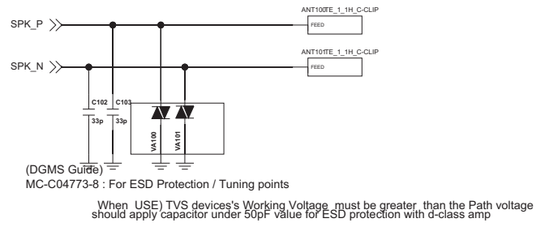


## ANT1

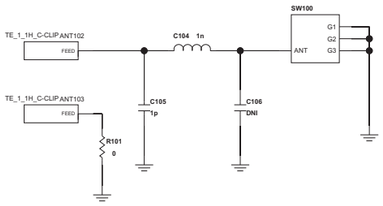


## ANT2

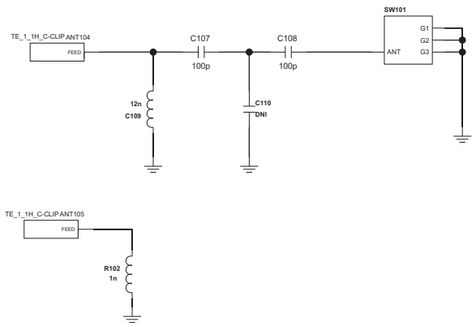



Copyright © 2014 LG Electronics. Inc. All right reserved.
Only for training and service purposes

# < 9-2-1_IO_USB2.0 >

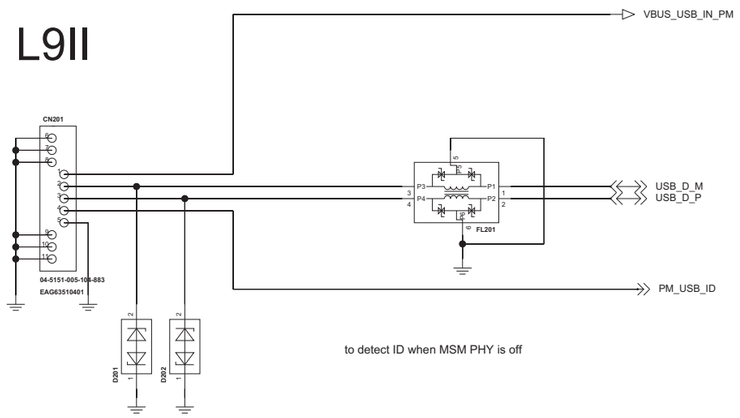


| | USB 3.0 | USB 2.0 |
|---|---|---|
| Data Rate | Super speed(5.0Gbps) | low(1.5M) , full(12M) , High(480Mbps) |
| Data Interface | Dual-simplex,4-wire differential | 2-wire differential |
| Cable signal Count | 6 : 4 for 3.0 2 for 2.0 2 | |

To be consistent with the USB 3.0 channel nominal differential characteristic impedence requirement of 90ohm, all measureed differential S-parametbe normalized with a 90ohm reference differential impedence

# LOWER FPCB TO MANIN CONNECTOR

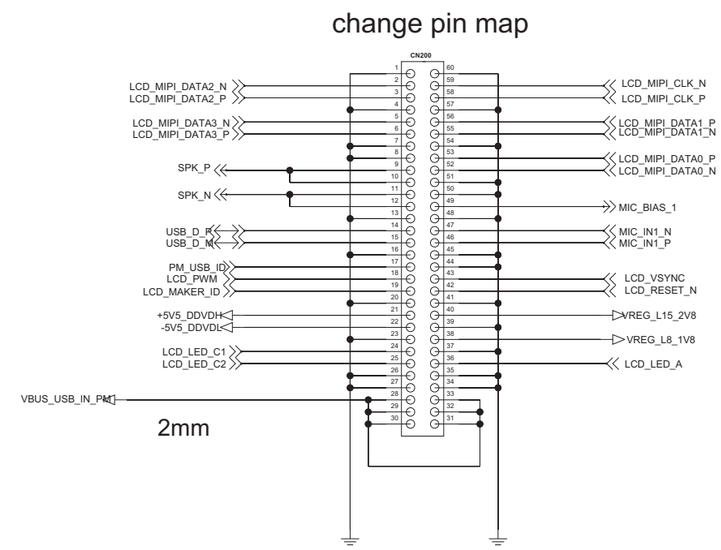


# B1_lite_5.7" LCD Connector

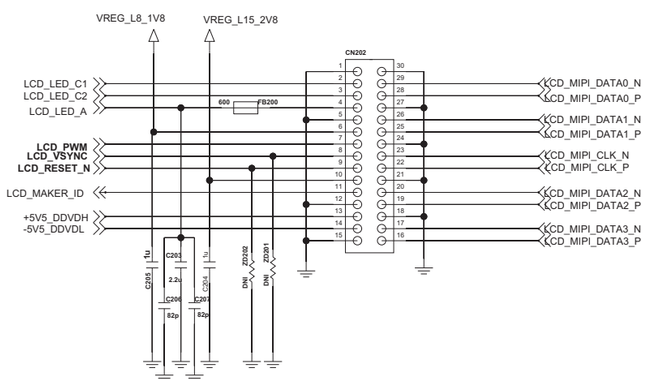




Copyright © 2014 LG Electronics. Inc. All right reserved.
Only for training and service purposes

# 7. BGA PIN MAP

## MSM8926 - Top View (upper left quadrant)

| | 1 | 2 | 3 | 4 | 5 | 6 | 7 | 8 | 9 | 10 | 11 | 12 | 13 | 14 | 15 | 16 | 17 | 18 | 19 | 20 |
|---|---|---|---|---|---|---|---|---|---|---|---|---|---|---|---|---|---|---|---|---|
| A | | GND | | GPIO_58 | | GND | | GPIO_53 | | GPIO_56 | | GND | | GND | | GND | | VDD_DDR_1P8 | | GND |
| B | GND | | GPIO_61 | | VDD_DDR_1P8 | | GPIO_59 | | GPIO_54 | | GND | | GND | | GND | | GND | | VDD_DDR_1P2 | |
| C | | GPIO_113 | | GPIO_60 | | GPIO_57 | | GND | | GPIO_55 | | GND | | GND | | GND | | VDD_P3 | | GND |
| D | SDC1_DATA_5 | | GPIO_2 | | GPIO_3 | | GND | | GND | | GND | | GND | | GND | | GND | | VREF_UIM | |
| E | | SDC1_DATA_1 | | SDC1_DATA_4 | | GPIO_1 | | | | VDD_P5 | | GND | | GND | | GND | | VDD_P6 | | GND |
| F | SDC1_CLK | | SDC1_DATA_0 | | | | GPIO_0 | | GND | | GND | | GND | | GND | | GND | | VDD_USB_1P8 | |
| G | | SDC1_DATA_6 | | SDC1_DATA_2 | | SDC1_CMD | | GND | | GND | | VDD_APC | | VDD_APC | | VDD_APC | | GND | | USB_HS2_SYSCLK |
| H | GND | | GND | | VDD_DDR_1P2 | | VDD_SDC_CDC | | GND | | GND | | GND | | GND | | GND | | GND | |
| J | | SDC1_DATA_3 | | | | GND | | VDD_P7 | | VDD_APC | | VDD_APC | | GND | | VDD_APC | | VDD_APC | | VDD_CORE |
| K | SDC1_DATA_7 | | | | GND | | VDD_SDC_CDC | | GND | | GND | | GND | | GND | | GND | | GND | |
| L | | SDC2_DATA_1 | | SDC2_CMD | | CXO | | VDD_APC | | VDD_APC | | VDD_APC | | VDD_MEM | | VDD_APC | | VDD_APC | | VDD_CORE |
| M | SDC2_DATA_2 | | SDC2_CLK | | SDC2_DATA_0 | | GND | | GND | | GND | | GND | | GND | | GND | | GND | |
| N | | GND | | VREF_SDC | | GND | | VDD_APC | | VDD_APC | | VDD_APC | | VDD_APC | | VDD_APC | | VDD_APC | | VDD_PLL2 |
| P | SDC2_DATA_3 | | GND | | | | GND | | GND | | GND | | GND | | GND | | GND | | GND | |
| R | | GPIO_104 | | GND | | VDD_P2 | | VDD_APC | | VDD_APC | | VDD_APC | | VDD_APC | | VDD_APC | | VDD_APC | | VDD_MEM |
| T | GPIO_92 | | GPIO_103 | | GPIO_105 | | GPIO_115 | | GND | | GND | | GND | | GND | | GND | | GND | |
| U | | GPIO_102 | | GPIO_101 | | VREF_APC_MPM | | VDD_APC | | VDD_APC | | VDD_APC | | VDD_APC | | VDD_APC | | VDD_APC | | VDD_CORE |
| V | GPIO_116 | | GND | | TX_DAC0_VREF | | VDD_P3 | | GND | | GND | | GND | | GND | | GND | | GND | |
| W | | TX_DAC0_QP | | GPIO_117 | | GPIO_118 | | VDD_APC | | VDD_APC | | VDD_MEM | | VDD_CORE | | VDD_CORE | | VDD_MEM | | VDD_MEM |
| Y | TX_DAC0_QM | | | | GND | | VDD_A2 | | GND | | GND | | GND | | GND | | GND | | GND | |

Not Used



Copyright © 2014 LG Electronics. Inc. All right reserved.
Only for training and service purposes

## MSM8926 - Top View (upper right quadrant)

| | 21 | 22 | 23 | 24 | 25 | 26 | 27 | 28 | 29 | 30 | 31 | 32 | 33 | 34 | 35 | 36 | 37 | 38 | 39 | 40 |
|---|---|---|---|---|---|---|---|---|---|---|---|---|---|---|---|---|---|---|---|---|
| A | | USB_HS2_REXT | | GPIO_120 | | GND | | GPIO_70 | | GPIO_51 | | GND | | VDD_DDR_1P8 | | GND | | GND | | GND |
| B | GND | | VDD_P1 | | GND | | CXO_EN | | GPIO_67 | | GPIO_52 | | VDD_P1 | | SLEEP_CLK | | VDD_DDR_1P2 | | GND | |
| C | | GPIO_119 | | GPIO_110 | | GPIO_114 | | GPIO_71 | | GND | | GND | | PS_HOLD | | GPIO_7 | | GPIO_64 | | GPIO_66 |
| D | GND | | USB_HS2_ID | | GPIO_111 | | PMIC_SPMI_DATA | | GND | | GND | | RESIN_N | | GPIO_6 | | GPIO_50 | | GPIO_65 | |
| E | | USB_HS2_DP | | | | | | | | GND | | RESOUT_N | | GND | | GND | | GND | | GND |
| F | USB_HS2_DM | | VDD_USB_CORE | | GPIO_112 | | | | GPIO_4 | | GPIO_5 | | GND | | GND | | GND | | VDD_P1 | |
| G | | GND | | USB_HS2_VBUS | | VDD_QFPROM_PRG | | PMIC_SPMI_CLK | | GND | | GND | | GPIO_69 | | GND | | GND | | GPIO_109 |
| H | VDD_USB_3P3 | | GND | | VDD_P4 | | VDD_P8 | | GND | | VDD_P3 | | GND | | GPIO_63 | | GND | | GND | |
| J | | GND | | VDD_P3 | | RSVD | | GND | | EBI0_VREF_D3 | | GND | | VDD_P5 | | GND | | GPIO_62 | | GPIO_106 |
| K | GND | | GND | | GND | | GND | | GND | | GND | | GND | | GPIO_72 | | WCN_XO | | GPIO_107 | |
| L | | GND | | GND | | VDD_CORE | | GND | | VDD_EBI0_CDC | | VDD_MEM | | GPIO_49 | | | | | | GPIO_108 |
| M | GND | | VDD_MEM | | VDD_MEM | | VDD_CORE | | GND | | GND | | GND | | GPIO_68 | | GND | | VDD_P1 | |
| N | | VDD_MEM | | GND | | VDD_MEM | | VDD_CORE | | VDD_CORE | | VDD_MEM | | GND | | GND | | GPIO_41 | | GND |
| P | GND | | VDD_MODEM | | VDD_CORE | | VDD_MEM | | GND | | VDD_CORE | | EBI0_VREF_D1 | | WLAN_BB_QM | | GND | | GPIO_44 | |
| R | | VDD_MEM | | GND | | GND | | GND | | VDD_EBI0_CDC | | GND | | WLAN_BB_QP | | GND | | | | GPIO_40 |
| T | GND | | VDD_PLL1 | | GND | | VDD_MEM | | VDD_PLL2 | | GND | | VDD_WLAN | | GND | | | | GPIO_42 | |
| U | | VDD_MODEM | | GND | | VDD_CORE | | GND | | GND | | WLAN_REXT | | WLAN_BB_IM | | GND | | | | GND |
| V | GND | | VDD_CORE | | GND | | VDD_CORE | | GND | | GND | | GND | | WLAN_BB_IP | | GPIO_43 | | VDD_P1 | |
| W | | VDD_CORE | | GND | | GND | | GND | | VDD_CORE | | GND | | GND | | GND | | VDD_DDR_1P2 | | GPIO_46 |
| Y | GND | | VDD_CORE | | GND | | VDD_CORE | | VDD_CORE | | GND | | GPIO_25 | | VDD_P3 | | GPIO_39 | | VREF_DQ | |

Not Used



Copyright © 2014 LG Electronics. Inc. All right reserved.
Only for training and service purposes

## MSM8926 - Top View (lower left quadrant)

| | 1 | 2 | 3 | 4 | 5 | 6 | 7 | 8 | 9 | 10 | 11 | 12 | 13 | 14 | 15 | 16 | 17 | 18 | 19 | 20 |
|---|---|---|---|---|---|---|---|---|---|---|---|---|---|---|---|---|---|---|---|---|
| AA | | | | ET_DAC_P | | TX_DAC0_IREF | | GND | | VDD_MEM | | VDD_MEM | | VDD_MEM | | VDD_CORE | | VDD_CORE | | GND |
| AB | VDD_DDR_1P8 | | TX_DAC0_IP | | TX_DAC0_IM | | GND | | GND | | GND | | GND | | GND | | GND | | GND | |
| AC | | VREF_CA | | ET_DAC_M | | TX_DAC1_QP | | TX_DAC1_VREF | | VDD_PLL2 | | GND | | VDD_MODEM | | VDD_CORE | | VDD_PLL1 | | GND |
| AD | EBI0_ZQ0 | | TX_DAC1_IM | | TX_DAC1_IP | | TX_DAC1_QM | | VDD_A2 | | GND | | VDD_MODEM | | VDD_MODEM | | GND | | VDD_MEM | |
| AE | | BBRX_CH1_QP | | GND | | GND | | TX_DAC1_IREF | | | | GND | | VDD_MODEM | | VDD_MODEM | | VDD_CORE | | GND |
| AF | BBRX_CH1_QM | | BBRX_CH1_IP | | BBRX_CH1_IM | | GND | | VDD_A2 | | GND | | GND | | GND | | GND | | VDD_MEM | |
| AG | | BBRX_CH0_IM | | BBRX_CH0_QM | | BBRX_CH0_QP | | VDD_A1 | | GND | | GND | | GND | | GND | | VDD_CORE | | GND |
| AH | BBRX_CH0_IP | | BBRX_CH2_QP | | BBRX_CH2_QM | | VDD_A1 | | GND | | VDD_MEM | | VDD_MEM | | VDD_MEM | | VDD_MEM | | VDD_MEM | |
| AJ | | VDD_P1 | | BBRX_CH2_IM | | BBRX_CH2_IP | | VDD_A2 | | VDD_EBI0_CDC | | GND | | VDD_CORE | | GND | | GND | | VDD_CORE |
| AK | BBRX_CH3_QM | | BBRX_CH3_IM | | GND | | VDD_A1 | | GND | | VDD_CORE | | VDD_CORE | | VDD_CORE | | GND | | VDD_CORE | |
| AL | | BBRX_CH3_QP | | BBRX_CH3_IP | | GND | | VDD_P3 | | | | GND | | VDD_CORE | | VDD_MIPI_DSI_0P4 | | GND | | VDD_CORE |
| AM | GND | | GNSS_BB_IM | | GND | | GND | | EBI0_CAL_REXT | | GND | | VDD_P3 | | | | GND | | VDD_MIPI_DSI_1P8 | |
| AN | | VDD_P1 | | GNSS_BB_IP | | GPIO_91 | | GND | | EBI0_VREF_CA | | GND | | GPIO_78 | | VDD_P3 | | GND | | GND |
| AP | GPIO_90 | | GNSS_BB_QM | | GND | | GND | | GND | | | | GPIO_82 | | GPIO_76 | | GND | | MIPI_DSI0_LN1_N | |
| AR | | GPIO_89 | | GNSS_BB_QP | | GPIO_99 | | GPIO_94 | | GPIO_85 | | GPIO_81 | | | | MIPI_DSI0_LN3_N | | GND | | MIPI_DSI0_LN1_P |
| AT | GND | | GPIO_98 | | GPIO_88 | | GPIO_100 | | GND | | GPIO_80 | | | | GND | | MIPI_DSI0_CLK_P | | | |
| AU | | VDD_DDR_1P2 | | GPIO_97 | | GPIO_93 | | | | GND | | GPIO_77 | | GND | | MIPI_DSI0_LN3_P | | GND | | GND |
| AV | GPIO_96 | | GPIO_95 | | GPIO_87 | | GPIO_84 | | GND | | GPIO_75 | | GND | | GND | | MIPI_DSI0_CLK_N | | GND | |
| AW | | GND | | GND | | GPIO_83 | | GND | | GPIO_73 | | GND | | MIPI_DSI0_LN2_P | | VDD_DDR_1P2 | | GND | | GND |
| AY | GND | | GND | | GPIO_86 | | VDD_DDR_1P8 | | GPIO_79 | | GPIO_74 | | VDD_P1 | | MIPI_DSI0_LN2_N | | VDD_MIPI_DSI_1P2 | | EBI0_ZQ1 | |

Not Used



Copyright © 2014 LG Electronics. Inc. All right reserved.
Only for training and service purposes

## MSM8926 - Top View (lower right quadrant)

| | | | | | | | | | | | | | | | | | | | | |
|---|---|---|---|---|---|---|---|---|---|---|---|---|---|---|---|---|---|---|---|---|
| | VDD_CORE | | VDD_CORE | | GND | | VDD_MEM | | VDD_CORE | | GND | | VDD_P3 | | | | | | GND | AA |
| VDD_CORE | | VDD_CORE | | GND | | VDD_CORE | | VDD_CORE | | GND | | GND | | GPIO_27 | | GPIO_10 | | VDD_DDR_1P8 | | AB |
| | GND | | VDD_CORE | | GND | | VDD_MEM | | VDD_CORE | | GND | | GPIO_11 | | GPIO_26 | | GPIO_45 | | GPIO_48 | AC |
| VDD_CORE | | VDD_MEM | | GND | | GND | | GND | | VDD_EBI0_CDC | | GPIO_9 | | GPIO_31 | | GPIO_28 | | GPIO_47 | | AD |
| | GND | | VDD_CORE | | VDD_PLL1 | | VDD_MEM | | VDD_CORE | | VDD_CORE | | GPIO_8 | | GND | | GND | | GPIO_34 | AE |
| VDD_CORE | | VDD_MEM | | GND | | GND | | GND | | VDD_MEM | | EBI0_VREF_D0 | | | | | | VDD_P1 | | AF |
| | GND | | GND | | VDD_CORE | | VDD_MEM | | GND | | GND | | VDD_P3 | | GND | | GND | | GPIO_30 | AG |
| VDD_CORE | | VDD_MEM | | GND | | GND | | GND | | VDD_MEM | | GND | | GPIO_32 | | GND | | GPIO_29 | | AH |
| | GND | | VDD_MEM | | VDD_CORE | | VDD_EBI0_CDC | | VDD_CORE | | GND | | GND | | GPIO_33 | | GND | | GPIO_34 | AJ |
| VDD_CORE | | GND | | GND | | GND | | GND | | GND | | VDD_P3 | | GPIO_35 | | GND | | GND | | AK |
| | GND | | GND | | VDD_CORE | | GND | | VDD_CORE | | GND | | GPIO_38 | | GND | | GND | | GND | AL |
| VDD_CORE | | MIPI_DSI_LDO | | GND | | GND | | EBI0_VREF_D2 | | GND | | GND | | GPIO_36 | | GND | | VDD_P1 | | AM |
| | GND | | MIPI_CSI0_LN2_P | | GND | | GND | | | | GND | | TCK | | GPIO_15 | | GND | | GND | AN |
| GND | | MIPI_CSI0_LN2_N | | VDD_MIPI_CSI | | GND | | | | GND | | TRST_N | | GPIO_17 | | GPIO_22 | | GND | | AP |
| | MIPI_CSI0_LN4_P | | | | MIPI_CSI0_LN0_P | | GND | | GND | | TDO | | | | GPIO_14 | | GPIO_23 | | GPIO_37 | AR |
| MIPI_DSI0_LN0_N | | GND | | GND | | MIPI_CSI1_LN0_P | | GND | | SRST_N | | | | | | GPIO_20 | | VDD_P1 | | AT |
| | MIPI_CSI0_LN4_N | | GND | | MIPI_CSI0_LN0_N | | GND | | GND | | MODE_0 | | | | VDD_DDR_1P2 | | GPIO_13 | | GPIO_21 | AU |
| MIPI_DSI0_LN0_P | | GND | | GND | | MIPI_CSI1_LN0_N | | GND | | MODE_1 | | | | | | GPIO_12 | | GPIO_16 | | AV |
| | MIPI_CSI0_LN3_P | | GND | | MIPI_CSI0_LN1_P | | MIPI_CSI1_LN1_P | | GND | | VDD_P1 | | TMS | | GPIO_19 | | GND | | GND | AW |
| VDD_P1 | | MIPI_CSI0_LN3_N | | MIPI_CSI0_LN1_N | | MIPI_CSI1_LN1_N | | GND | | GND | | VDD_DDR_1P8 | | TDI | | GPIO_18 | | GND | | AY |
| 21 | 22 | 23 | 24 | 25 | 26 | 27 | 28 | 29 | 30 | 31 | 32 | 33 | 34 | 35 | 36 | 37 | 38 | 39 | 40 | |

Not Used



Copyright © 2014 LG Electronics. Inc. All right reserved.
Only for training and service purposes

## POP_MEMORY - Top View

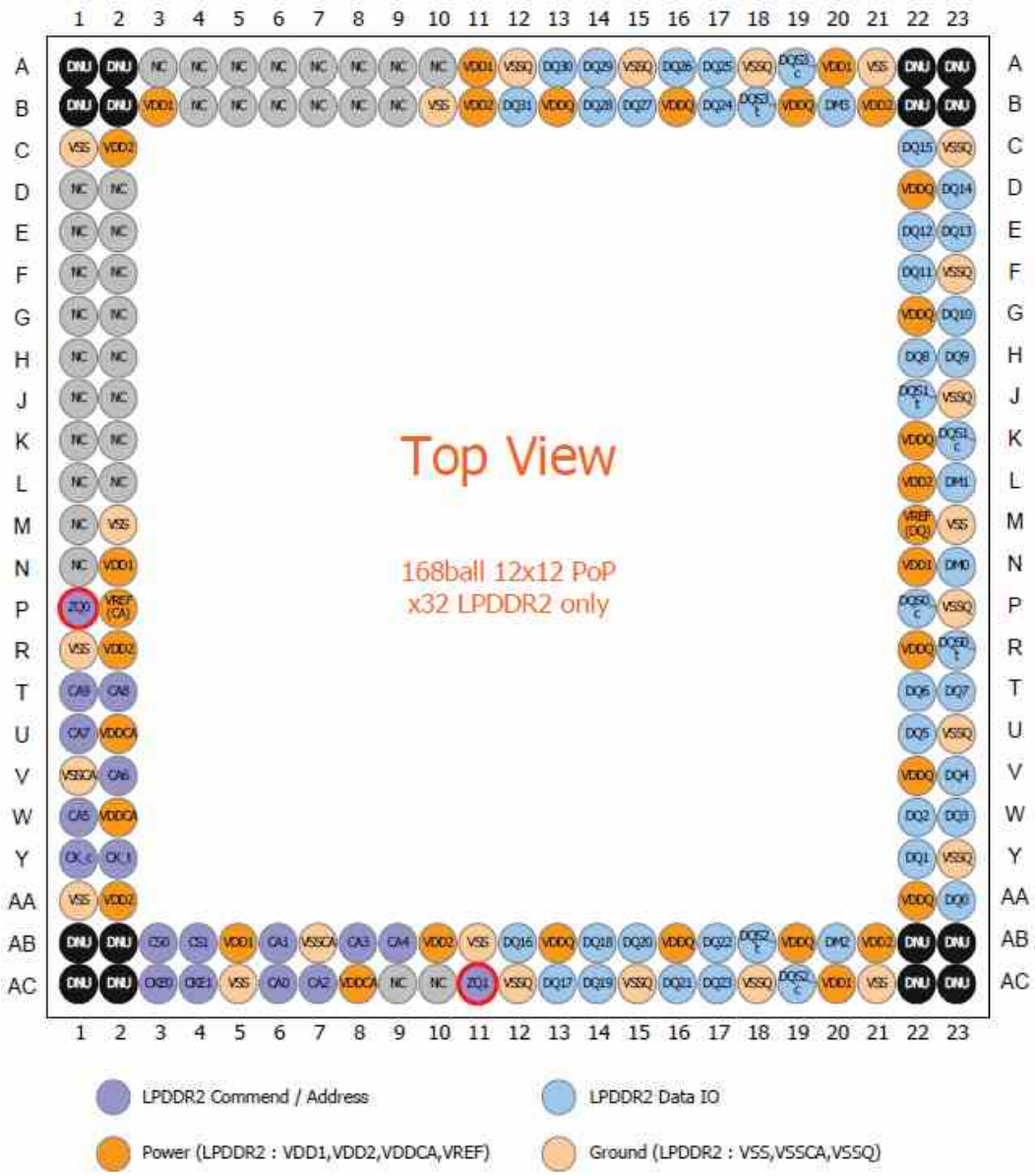


NC Not Used


Copyright © 2014 LG Electronics. Inc. All right reserved.
Only for training and service purposes

**eMMC - Top View**

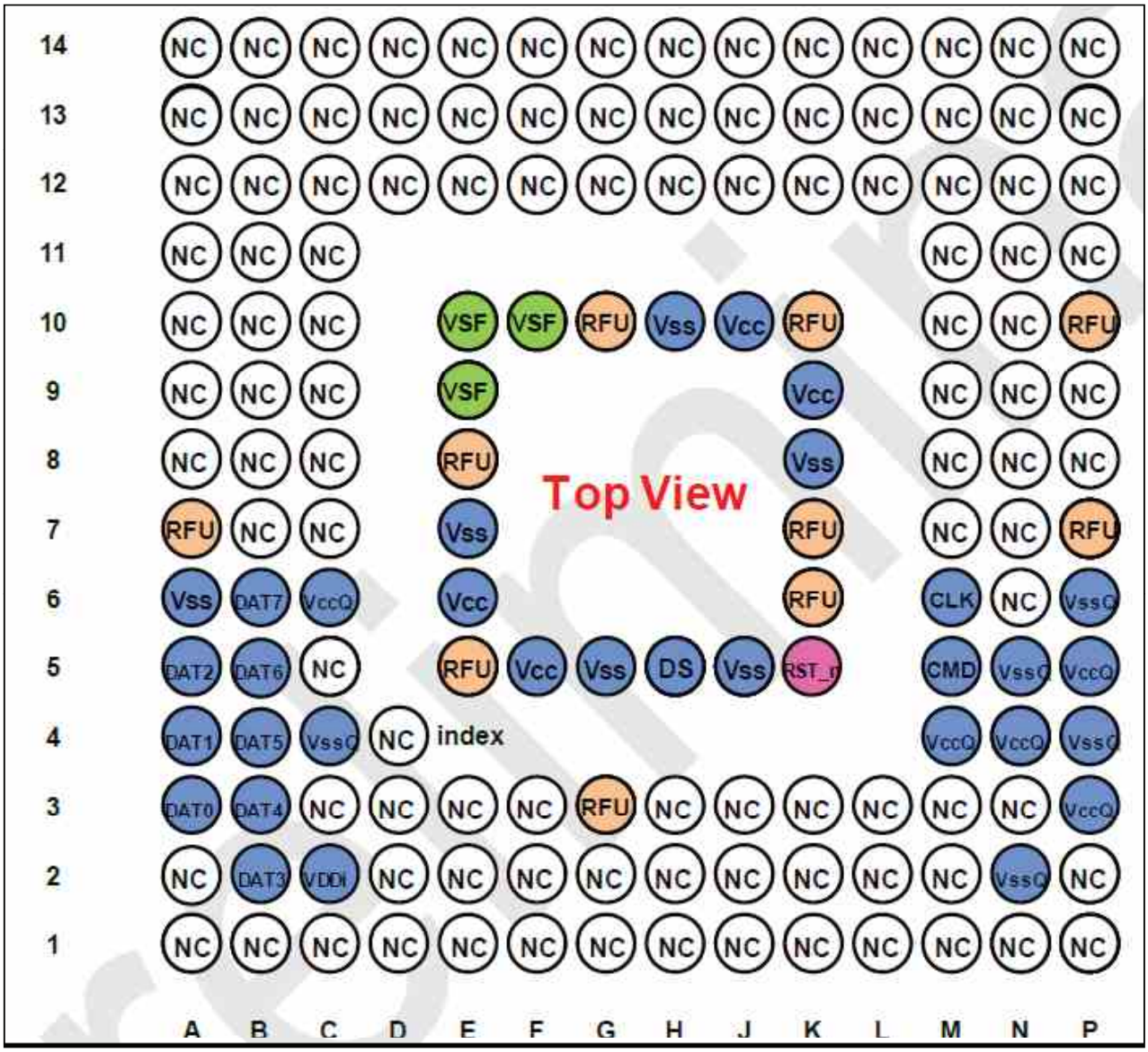


Not Used



Copyright © 2014 LG Electronics. Inc. All right reserved.
Only for training and service purposes

## PM8921 - Top View

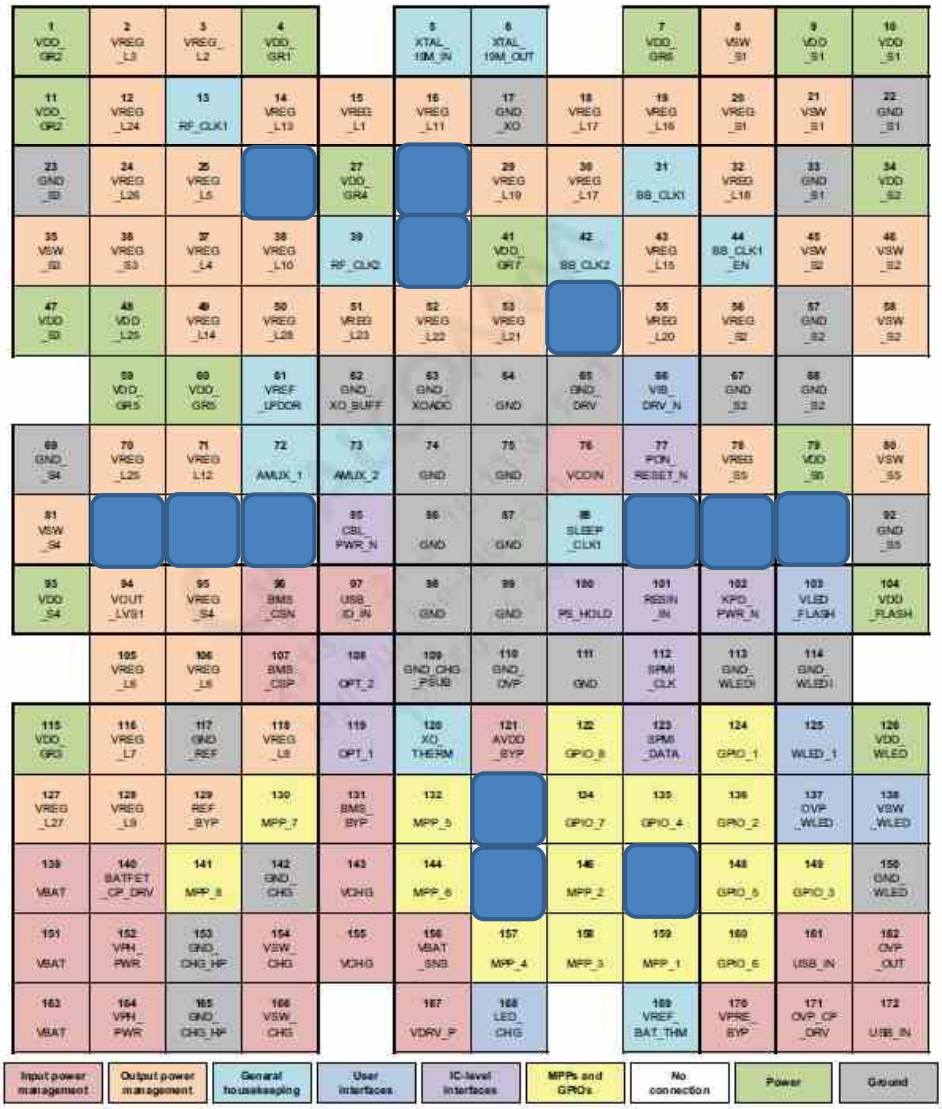


Not Used



Copyright © 2014 LG Electronics. Inc. All right reserved.
Only for training and service purposes

**WCN3660A– TOP View**

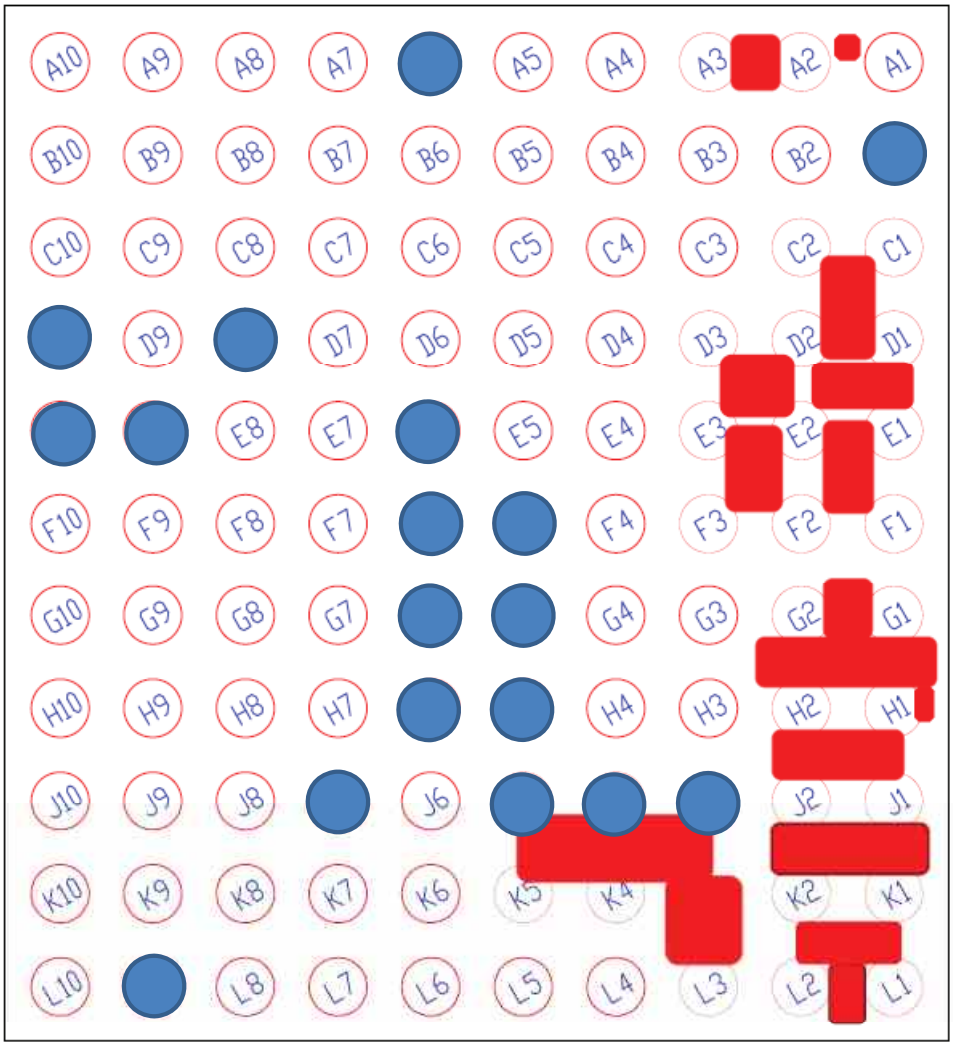


Not Used



Copyright © 2014 LG Electronics. Inc. All right reserved.
Only for training and service purposes

## WTR1625 - Top View

| | | | | | | | | | | | | | | | | | | |
|---|---|---|---|---|---|---|---|---|---|---|---|---|---|---|---|---|---|---|
| | 1 DRX_ MB3_IN | | 2 DRX_ HMB4_IN | | 3 GND | | 4 DRX_ HB1_IN | | 5 DRX_ LB1_IN | | 6 GND | | 7 DRX_ LB4_IN | | 8 GND | | 9 PRX_ HB1_IN | |
| 10 GND | | 11 VDD_RF1 _D_MB | | 12 DRX_ HB2_IN | | 13 DRX_ HB3_IN | | 14 VDD_RF1 _D_LB_LO | | 15 DRX_ LB2_IN | | 16 DRX_ LB3_IN | | 17 PRX_ HB2_IN | | 18 PRX_ HB3_IN | | 19 PRX_ HMB4_IN |
| | 20 DRX_ MB2_IN | | 21 GND | | 22 VDD_RF1 _D_HB | | 23 GND | | | | 24 GND | | 25 VDD_RF1 _P_HB_LO | | 26 GND | | 27 PRX_ MB3_IN | |
| 28 DRX_ MB1_IN | | 29 DRX_MD _CA_IN | | | | 30 DRX_HD _CA_OUT | | | | 31 VDD_RF1 _D_LB | | 32 DRX_LD _CA_OUT | | 33 PRX_HD _CA_OUT | | 34 VDD_RF1 _P_HMB | | 35 GND |
| | 36 GNSS_ RF_INP | | | | 38 VDD_RF1 _D_LOM | | 39 GND | | 40 GND | | | | 41 GND | | 42 GND | | 43 PRX_ MB2_IN | |
| 44 GNSS_ RF_INM | | 45 GND | | 46 GND | | 47 GND | | 48 VDD_RF1 _G_VCO | | 49 GND | | | | | | 50 PRX_MR _CA_IN | | 51 PRX_ MD1_IN |
| | 52 VDD_RF1_G _LNA | | 53 GNSS_ BB_IM | | 54 VDD_RF2 _D_BB | | | | 55 GND | | | | 56 GND | | 57 VDD_RF1_ P_HMB_LO | | 58 GND | |
| 59 VDD_RF1 _G_BB | | 60 GNSS_ BB_IP | | 61 DRX_ BB_QP | | | | 62 VDD_RF2 _G_VCO | | 63 GND | | | | 64 GND | | | | 65 PRX_ LB4_IN |
| | 66 GND | | 67 GNSS_ BB_QP | | 68 DRX_ BB_QM | | | | 69 GND | | 70 GND | | 71 RTUNE | | 72 VDD_RF1 _P_LB | | 73 PRX_ LB3_IN | |
| 74 VDD_RF1 _G_VCO | | 75 GND | | 76 DRX_ BB_IP | | 77 GND | | 78 VDD_RF1 _S_PLL | | 79 VDD_RF1 _P_PLL | | 80 VDD_RF2 _P_VCO | | 81 GND | | 82 GND | | 83 GND |
| | 84 GND | | 85 GNSS_ BB_QM | | 86 DRX_ BB_IM | | 87 GND | | 88 GND | | 89 GND | | 90 VDD_RF1 _P_VCO | | 91 PRX_LB _CA_OUT | | 92 PRX_ LB2_IN | |
| 93 VDD_RF1 _G_PLL | | 94 GND | | 95 SSBI_ PRX_DRX | | 96 GND | | 97 PRX_ BB_QM | | 98 VDD_RF2 _P_BB | | 99 PRX_ BB_IP | | 100 VDD_RF2 _P_RX | | 101 GND | | 102 PRX_ LB1_IN |
| | 103 VDD_DIO | | 104 GP_ DATA1 | | 105 SSBI_ TX_GNSS | | 106 GND | | 107 PRX_ BB_QP | | 108 PRX_ BB_IM | | 109 ADC_IN | | 110 GND | | 111 GND | |
| 112 GND | | 113 GND | | 114 VDD_RF2 _T_PLL | | 115 VDD_RF1 _T_SYN | | 116 VDD_RF2 _FBRX | | 117 PDET_ RFFB | | 118 GND | | 119 GND | | 120 GND | | 121 TX_ HB2_OUT |
| | 122 GND | | 123 GP_ DATA0 | | 124 GND | | 125 GND | | 126 VDD_RF2 _T_BB | | 127 DAC_ REF | | 128 GND | | 129 VDD_RF2 _T_DA | | 130 TX_ HB1_OUT |
| 131 XO_IN | | 132 GND | | 133 GND | | | | 134 GND | | 135 VDD_RF1 _T_LO | | 136 VDD_RF1 _T_UPC | | 137 VDD_RF1 _T_DA | | 138 TX_ MB2_OUT | | 139 TX_ MB3_OUT |
| | 140 GND | | 141 GND | | | | 142 GND | | 143 GND | | | | 144 GND | | 145 GND | | 146 TX_ MD1_OUT | |
| 147 VDD_RF2 _XO | | 148 GND | | 149 VDD_RF1 _T_VCO | | | | 150 GND | | 151 TX_ BB_IP | | 152 TX_ BB_QP | | 153 TX_ LB2_OUT | | 154 TX_ LB4_OUT | | 155 TX_ MB4_OUT |
| | 156 GND | | 157 VDD_RF2 _T_VCO | | 158 GND | | 159 GND | | 160 TX_ BB_IM | | 161 TX_ BB_QM | | 162 TX_ LB1_OUT | | 163 TX_ LB3_OUT | | 164 GND | |

Not Used



Copyright © 2014 LG Electronics. Inc. All right reserved.
Only for training and service purposes

## WTR1625L - Top View

| | | | | | | | | | | | | | | | | | | |
|---|---|---|---|---|---|---|---|---|---|---|---|---|---|---|---|---|---|---|
| | 1 DRX_ MB3_IN | | 2 DRX_ HMB1_IN | | 3 GND | | 4 DRX_ HB1_IN | | 5 DRX_ LB1_IN | | 6 GND | | 7 DRX_ LB1_IN | | 8 GND | | 9 PRX_ HB1_IN | |
| 10 GND | | 11 VDD_RF1 _D_MB | | 12 DRX_ HB2_IN | | 13 DRX_ HB3_IN | | 14 VDD_RF1 _D_LB_LO | | 15 DRX_ LB2_IN | | 16 DRX_ LB3_IN | | 17 PRX_ HB2_IN | | 18 PRX_ HB3_IN | | 19 PRX_ HMB4_IN |
| | 20 DRX_ MB2_IN | | 21 GND | | 22 VDD_RF1 _D_HB | | 23 GND | | | | 24 GND | | 25 VDD_RF1 _P_HB_LO | | 26 GND | | 27 PRX_ MB3_IN | |
| 28 DRX_ MB1_IN | | 29 DRX_MD _CA_IN | | | | 30 DRX_HD _CA_OUT | | | | 31 VDD_RF1 _D_LB | | 32 DRX_LD _CA_OUT | | 33 PRX_HD _CA_OUT | | 34 VDD_RF1 _P_HMB | | 35 GND |
| | 36 GNSS_ RF_INP | | | | 38 VDD_RF1 _D_LOM | | 39 GND | | 40 GND | | | | 41 GND | | 42 GND | | 43 PRX_ MB2_IN | |
| 44 GNSS_ RF_INM | | 45 GND | | 46 GND | | 47 GND | | 48 VDD_RF1 _G_VCO | | 49 GND | | | | | | 50 PRX_MR CA_IN | | 51 PRX_ MB1_IN |
| | 52 VDD_RF1_G _LNA | | 53 GNSS_ BB_IM | | 54 VDD_RF2 _D_DD | | | | 55 GND | | | | 56 GND | | 57 VDD_RF1_ P_HMD_LO | | 58 GND | |
| 59 VDD_RF1 _G_BB | | 60 GNSS_ BB_IP | | 61 DRX_ BB_QP | | | | 62 VDD_RF2 _S_VCO | | 63 GND | | | | 64 GND | | | | 65 PRX_ LB4_IN |
| | 66 GND | | 67 GNSS_ BB_QP | | 68 DRX_ BB_QM | | | | 69 GND | | 70 GND | | 71 RTUNE | | 72 VDD_RF1 _P_LB | | 73 PRX_ LB3_IN | |
| 74 VDD_RF1 _G_VCO | | 75 GND | | 76 DRX_ BB_IP | | 77 GND | | 78 VDD_RF1 _S_PLL | | 79 VDD_RF1 _P_PLL | | 80 VDD_RF2 _P_VCO | | 81 GND | | 82 GND | | 83 GND |
| | 84 GND | | 85 GNSS_ BB_QM | | 86 DRX_ BB_IM | | 87 GND | | 88 GND | | 89 GND | | 90 VDD_RF1 _P_VCO | | 91 PRX_LB _CA_OUT | | 92 PRX_ LB2_IN | |
| 93 VDD_RF1 _G_PLL | | 94 GND | | 95 SSBI_ PRX_DRX | | 96 GND | | 97 PRX_ DD_QM | | 98 VDD_RF2 _P_DD | | 99 PRX_ DD_IP | | 100 VDD_RF2 _P_RX | | 101 GND | | 102 PRX_ LD1_IN |
| | 103 VDD_DIO | | 104 GP_ DATA1 | | 105 SSBI_ TX_GNSS | | 106 GND | | 107 PRX_ BB_QP | | 108 PRX_ BB_IM | | 109 ADC_IN | | 110 GND | | 111 GND | |
| 112 GND | | 113 GND | | 114 VDD_RF2 _T_PLL | | 115 VDD_RF1 _T_SYN | | 116 VDD_RF2 _FBRX | | 117 PDET_ RFFB | | 118 GND | | 119 GND | | 120 GND | | 121 TX_ HB2_OUT |
| | 122 GND | | 123 GP DATA0 | | 124 GND | | 125 GND | | 126 VDD_RF2 _T_BB | | 127 DAC REF | | 128 GND | | 129 VDD_RF2 _T_DA | | 130 TX_ HB1_OUT | |
| 131 XO_IN | | 132 GND | | 133 GND | | | | 134 GND | | 135 VDD_RF1 _T_LO | | 136 VDD_RF1 _T_UPC | | 137 VDD_RF1 _T_DA | | 138 TX_ MB2_OUT | | 139 TX_ MB3_OUT |
| | 140 GND | | 141 GND | | | | 142 GND | | 143 GND | | | | 144 GND | | 145 GND | | 146 TX_ MD1_OUT | |
| 147 VDD_RF2 _XO | | 148 GND | | 149 VDD_RF1 _T_VCO | | | | 150 GND | | 151 TX_ BB_IP | | 152 TX_ BB_QP | | 153 TX_ LB2_OUT | | 154 TX_ LB4_OUT | | 155 TX_ MB4_OUT |
| | 156 GND | | 157 VDD_RF2 _T_VCO | | 158 GND | | 159 GND | | 160 TX_ BB_IM | | 161 TX_ BB_QM | | 162 TX_ LB1_OUT | | 163 TX_ LB3_OUT | | 164 GND | |

Not Used



Copyright © 2014 LG Electronics. Inc. All right reserved.
Only for training and service purposes

## WCD9302 - Top View

| | | | | | | | | | |
|---|---|---|---|---|---|---|---|---|---|
| 1 NCP_ C1M | | 2 NCP_ C1P | | 3 VDD _BUCK | | 4 INTR | | 5 GND | |
| | 6 BUCK _VOUT1 | | 7 GND_ BUCK | | 8 RESET_N | | 9 DMIC0 _CLK | | 10 VDD _IO |
| 11 NCP_ VNEG | | 12 BUCK _VOUT2 | | 13 BUCK _VSW | | 14 I2S_WS | | 15 I2S_SCK | |
| | 16 HPH_L | | 17 HPH_REF | | 18 GND | | 19 VDD _DIG | | 20 SLIMBUS _CLK |
| 21 HPH_R | | 22 CCOMP | | 23 GND _CFILT | | 24 DMIC0 _DATA | | 25 GND | |
| | 26 EAROP | | 27 VDD _TX_RX | | 28 GND | | 29 MCLK | | 30 SLIMBUS _DATA |
| 31 EAROM | | 32 LINE_ OUT2 | | 33 MODE | | 34 LDO_ HI_CAP | | 35 VDD _VBAT | |
| | 36 LINE_ OUT1 | | 37 MBHC _HSDET | | 38 MIC3_ INP | | 39 MIC1_ INM | | 40 GND _SPKDRV |
| 41 MIC4_ INM | | 42 MIC4_ INP | | 43 MIC3_ INM | | 44 MIC1_ INP | | 45 VDD _SPKDRV | |
| | | | 47 MIC2_ INP | | 48 MIC_ BIAS2 | | 49 SPKR_ DRVP | | 50 SPKR_ DRVM |
| | | | | 53 MIC2_ INM | | 54 MIC_ BIAS1 | | 55 GND _SPKDRV | |

Not Used



Copyright © 2014 LG Electronics. Inc. All right reserved.
Only for training and service purposes

**PN547 - Top View**

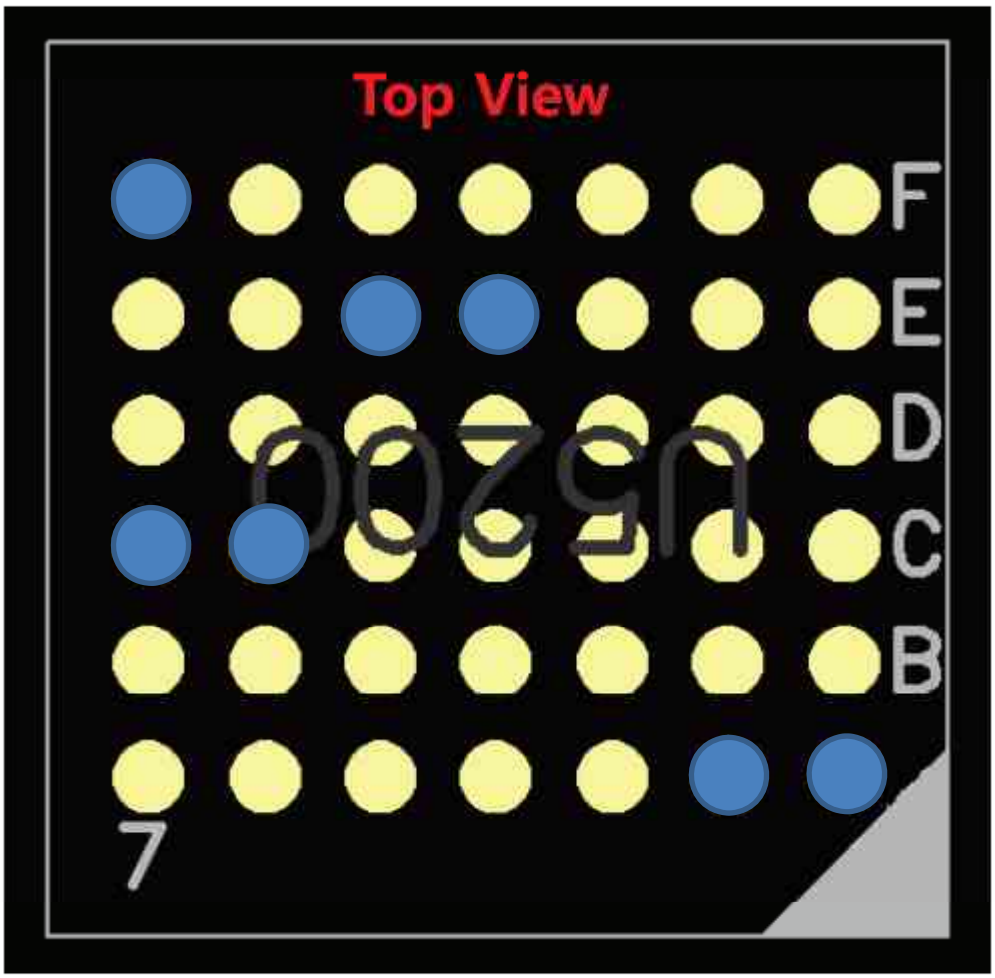


ALL USED


Copyright © 2014 LG Electronics. Inc. All right reserved.
Only for training and service purposes